AL RAYES LAUNDRY EQUIPMENT & ACCESSORIES

CATALOGUE

LAUNDRY EQUIPMENTS

INSPIRED BY NATURE
EMPOWERED BY INNOVATION



www.arle-qa.com

OUR COMPANY



Founded in 2005 under the esteemed Al Rayes Group, Al Rayes Laundry Equipment & Accessories (ARLE) has evolved into a leading organization with a strong and reputable presence across Qatar and the Middle East.

Over the years, ARLE has earned recognition for delivering high-quality products and comprehensive solutions across multiple sectors, including Laundry Green Chemicals, Hospitality Hygiene, Industrial and Institutional Cleaning, Housekeeping, Sanitation Products, Automobile Cleaning, Janitorial Supplies, and Corporate Services. With an unwavering commitment to quality and sustainability, ARLE ensures that all products and services comply with globally recognized standards and certifications such as ISO, NSF, Vegan, and ZDHC — demonstrating our dedication to excellence, safety, and environmental responsibility.

Our chemical range includes globally trusted brands from Europe, America, China, and India, such as Bufa Chemicals, Rampi Chemicals, Atlantic Care, Ideal, Delta, A.L Wilson and Cole & Wilson. Each brand we represent is carefully selected to ensure superior performance, reliability, and long-term value for our clients.
ARLE is the authorized distributor and reseller of premium Industrial laundry equipment, including Dry cleaning machines, Washers, Dryers, Pressing Machines, Ironers, and shoe cleaning machines, from internationally acclaimed brands such as Danube, Imesa, Firbimatic, Foltex, Jensen, Metal Progetti, CLM, Scarpavapor, and Renzacci. In addition, we are the sole authorized service and sales provider for FATTANK in Qatar, emphasizing our technical expertise and commitment to exceptional after-sales service and support

Guided by innovation and powered by decades of expertise, Al Rayes Laundry Equipment & Accessories continues to lead transformative progress within the laundry and hygiene industries — championing environmental sustainability, energy efficiency, and water conservation — while creating enduring value for our customers, employees, and stakeholders.



OUR MISSION

AL Rayes Laundry Equipment & Accessories is dedicated to serving our clients with the highest standards of service and by delivering superior-quality laundry equipment and accessories that ensure reliable performance and outstanding results. Our mission is to build lasting trust by consistently exceeding customer expectations and adding real value to their businesses. We strive to strengthen our position as a leading brand and to be recognized among the top laundry equipment and accessories companies in Qatar, the Middle East, and the global market through quality, innovation, and professional excellence.

OUR VISION

Inspired by Nature as the foundation of innovation, AL Rayes Laundry Equipment & Accessories envisions a future where advanced laundry solutions coexist with environmental responsibility. We are committed to promoting a greener and safer industry by supporting the use of zero-discharge, non-hazardous chemicals and encouraging sustainable production practices. Through the adoption of green chemistry, clean technologies, and environmentally responsible solutions, we aim to help phase out hazardous laundry practices while positioning AL Rayes as a trusted leader in sustainable laundry equipment and accessories in Qatar, the Middle East, and the global market.





OUR VALUES

At Al Rayes Laundry Equipment & Accessories, our values define the way we work and serve our customers. We are committed to delivering high-quality and reliable laundry equipment that businesses can depend on every day. Through innovation and continuous improvement, we aim to provide modern solutions that increase efficiency and performance. We believe in building strong relationships with our customers through honesty, professionalism, and dedicated support. Our focus on excellence ensures that every product and service we provide meets the highest standards in the laundry industry.

PRODUCTS/SERVICES & SUSTAINABILITY

SUSTAINABLE DEVELOPMENT GOALS





INDUSTRIAL WASHERS

Industrial washers are designed for powerful, high-capacity cleaning in professional laundry operations. Built for durability and efficiency, they deliver reliable performance even under heavy workloads. Ideal for commercial laundries, hotels, and healthcare facilities.



PROFESSIONAL WASHERS
WPR SERIES 8-10 ET2
DANUBE

The **WPR** professional washer-extractors with capacities of **8 and 10** kg, these models offer superior quality thanks to their industrial-grade components and excellent performance.

MODELS
1. WPR-8 ET2
2. WPR-10 ET2



FEATURES
- ET2 control with a 4,3" touch screen easy to use and fully programmable.
- 8 dosing signals as standard.
- USB connection. Free software online for programming, telemetry, data analysis...
- WET CLEANING as standard
- Short washing cycles (heating power 6 kw)

G FACTOR
- High G factor: 450.

EFFICIENCY
- Optimized consumption: automatic or manual adjustment of water levels and detergents according to the load.
- High G factor: reduced residual moisture, reduced drying time, energy savings.
- Water Saving system: 3 configuable levels of savings.

ROBUSTNESS
- Skinplate outer casing, aluminium door
- AISI-304 stainless steel drum, vat and ribs
- No inner drum seal: easy to clean
- Industrial house bearing and bearings: until
- 20 000 working hours
- Industrial gear and inverter
- Industrial door locking system

VERSATILITY
- STANDARD <> SELF-SERVICE ELECTRIC <> HOT
- WATER VALVE <> DRAIN PUMP SINGLE <>
- STACKED Suitable for many sectors: gyms, restaurants, campings, laundromats...

CONNECTIVITY
- Communication Danube Online - IoT as standard
- Remotetechnical service
- Management of laundry
- Multi-payment system

OTHERS
- Free standing: no anchoring to the floor.
- 2 water inlets
- 4 compartments detergents box
- Leveling feet included
- Models with drain valve or with drain pump
- Imbalance controlled by frequency inverter
- CE and WRAS certificates

FEATURES

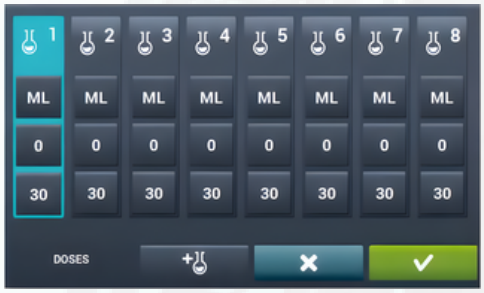

8 Dosing Signals as Standard
+Optional 6 Extra Dosing Signals

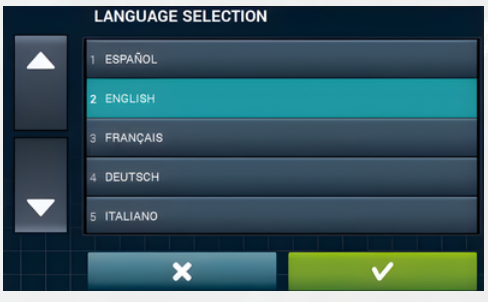

37 Launguages Accessible to everyone.



Easy Opening/closing System
Door Lock

WPR SERIES 8-10 ET2
DATA SHEET

DRUM	Unit	WPR-8 ET2		WPR-10 ET2	
Capacity 1/9	Kg	9		11	
Capacity 1/10	Kg	8		10	
Volume	l	80		100	
Diameter	mm	532		532	
Depth	mm	360		425	
GENERAL DETAILS					
Washing Spped/Spining Speed	r.p.m.	50 / 1250		50 / 1250	
G Factor	-	450		450	
Maximum force transmitted	KN	1,47±0,53		1,57±0,53	
Frequency-dynamic force	Hz	18,33		18,33	
Noise level	dB	<70		<70	
Coin Laundry Version	-	YES		YES	
Double Drain	-	OPT.		OPT.	
Weighing System	-	NO		NO	
Tilting System	-	NO		NO	
DOOR					
Height door bottom	mm	537 / 280		537 / 280	
Diameter	mm	373		373	
POWER					
Motor	kW	0,75		0,75	
Electric heating power	kW	6		6	
Total Electric power (electric model)	kW	6,25		6,25	
Total electric power (hw, steam model)	barG	0,75		0,75	
CONNECTIONS		E	HW/S	E	HW/S
Tension 110V- 1 +N+T	N° x mm² / A	-	2x1,5+T - 16A	-	2x1,5+T - 16A
Tension 230V-1+N+T	N° x mm² / A	2x6+T - 40A	2x1,5+T - 16A	2x6+T - 40A	2x1,5+T - 16A
Tension 230V- 3+T	N° x mm² / A	3x2,5+T - 20A	-	3x2,5+T - 20A	-
Tension 400V - 3 + N + T	N° x mm² / A	4x1,5+T - 16A	-	4x1,5+T - 16A	-
Steam inlet (Steam model)	inch	NO		NO	
Maxium steam consumtion (Steam model)	Kg/h	-		-	
Water inlet	inch	3/4"		3/4"	
Water main pressuer	Kgs/cm²	02-04		02-04	
Maxium Water Consumption*	Lit/h	49,6		62	
Drain	mm/inch	2"		2"	
Drainge Capacity	Lit/min	1"		1"	
DIMENSIONS / PACKING DIMENSIONS					
Net Width/Gross Width	mm	140 680 / 710		140 680 / 710	
Net Depth/Gross Depth	mm	698 / 832		742 / 832	
Net Height / Gross Height	mm	1.040 / 1.158		1.040 / 1.158	
Net Weight / Gross Weight	kg	150 / 161		155 / 166	
Volume	m³	0,49 / 0,68		0,52 / 0,68	

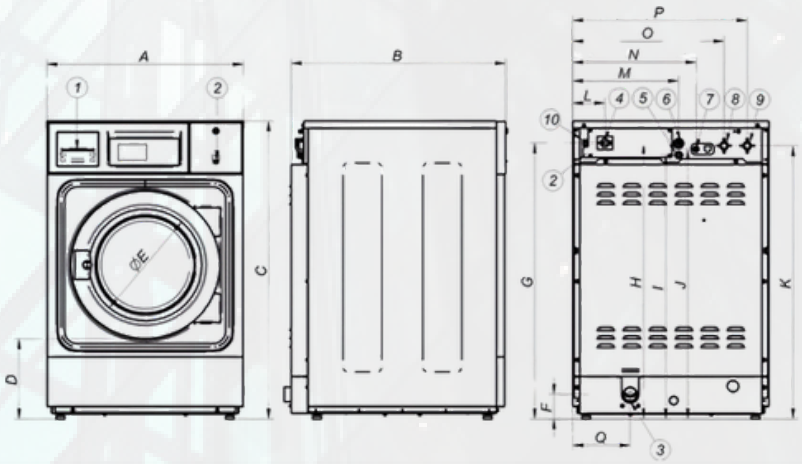

1. Soap dispenser
2. USB port
3. Drain valve/pump
4. Main switch
5. Liquid soap connection
6. Electrical connection
7. Liquid soap inlet
8. Cold water inlet
9. Hot water inlet
10. Ethernet port

	A	B	C	D	E	F	G	H	I	J	K	L	M	N	O	P	Q
WPR-8 V/P	680	698	1 040	278	373	86	964	962	922	942	954	110	366	427	524	603	199
WPR-10 V/P	680	742	1 040	278	373	86	964	962	922	942	954	110	366	427	524	603	199

HIGH SPIN WASHERS
WED SERIES 11-14-18-22-28 ET2
DANUBE

The **WED** range of high spin washer extractors from **11 to 28 kg** performs the most demanding tasks in any type of laundry.

- G-factor of 500 for models from 11 to 18 kg.
- G-factor of 450 for models 22 and 28 kg.

MODELS
1. WED-11 ET2
2. WED-14 ET2
3. WED-18 ET2
4. WED-22 ET2
5. WED-28 ET2



EASY TOUCH 2
- 7" touchscreen, user-friendly and fully programmable.
- Connection USB. Freesoftware online for programming, telemetry, data analysis...
- Videosdisplay (ads, instructions...)
- 37 available languages/8 dosingsignals as standard.

G FACTOR
- High G factor: Reduced residual moisture, reduced dryingtime, energy saving.

EFFICIENCY
- Optimized consumption: automatic or manual adjustment of water levels and detergents according to the load.
- Water Saving system:3 configuable levels of savings.
- Ready for water recovery tanks **AQUABAC.**

VERSATILITY
- ELECTRIC<>HOT WATER
- MAKE TOORDER: Possibility to customize
- WET CLEANING as standard

CONNECTIVITY
- Communication Danube Online - IoT as standard
- Remote technical service
- Management of laundry
- Multi-payment system

ERGONOMICS
- Big aluminium door
- Easy door lock system

MAINTENANCE
- Hinged panel: Easy access to part.
- Technical menu: statistics, errors...

OTHERS
- Free standing: no anchoring to the floor.
- Stainless steel vat and drum, skinplate outer casing.
- 3 water inlets..
- Detergents box with compartments.
- Imbalance controlled by frequency inverter.
- CE standards and KIWA for REG4 standards.

FEATURES

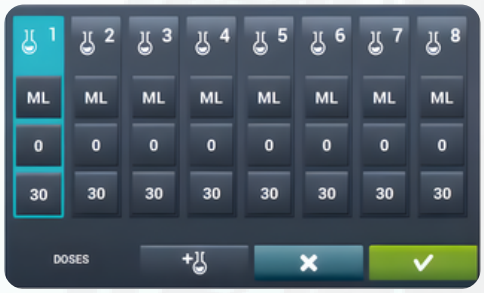

8 Dosing Signals as Standard
+Optional 6 Extra Dosing Signals

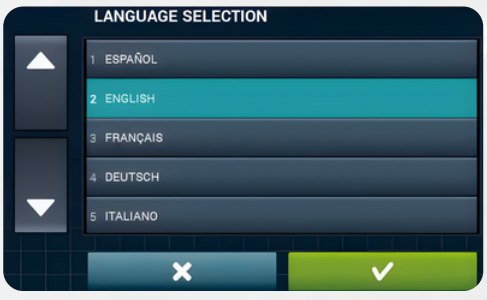

37 Launguages Accessible to everyone.



Easy Opening/closing System
Door Lock

WED SERIES 11-14-18-22-28 ET2
DATA SHEET

DRUM	Unit	WED-11 ET2	WED-14 ET2	WED-18 ET2	WED-22 ET2	WED-28 ET2
Capacity 1/9	Kg	11	14	20	25	31
Capacity 1/10	Kg	10	13	18	22	28
Volume	l	100	130	180	220	280
Diameter	mm	532	620	700	700	770
Depth	mm	425	430	470	560	585
GENERAL DETAILS						
Washing Spped/Spining Speed	r.p.m.	50 / 1.300	50 / 1.204	47 / 1.133	47 / 1.071	45 / 1.024
G Factor	-	500	500	500	450	450
Maximum force transmitted	KN	2,08 ±0,75	2,49 ±1,05	3,41 ±1,4	4,12 ±1,4	5,59 ±1,75
Frequency-dynamic force	Hz	16,7	16,7	16	16	15
Noise level	dB	< 70	< 70	< 70	< 70	< 70
Coin Laundry Version	-	YES	YES	YES	YES	YES
Double Drain	-	KIT	OPT.	OPT.	OPT.	OPT.
Weighing System	-	OPT.	OPT.	OPT.	OPT.	OPT.
Tilting System	-	NO	NO	NO	NO	NO
DOOR						
Height door bottom	mm	370	440	450	450	560
Diameter	mm	373	373	460	460	460
POWER						
Motor	kW	0,75	1,1	2,2	2,2	4
Electric heating power	kW	6	9	12	12	18
Total Electric power (electric model)	kW	6,25	9,4	12,75	12,75	19,2
Total electric power (hw, steam model)	barG	0,75	1,1	2,2	2,2	4

CONNECTIONS		E	HW/S	E	HW/S	E	HW/S	E	HW/S	E	HW/S
Tension 110V- 1 +N+T	N° x mm² / A	-	-	-	-	-	-	-	-	-	-
Tension 230V-1+N+T	N° x mm² / A	2x6+T - 40A	2x1,5+T - 16A	2x10+T - 50A	2x1,5+T - 16A	2x16+T - 63A	2x1,5+T - 16A	2x16+T - 63A	2x1,5+T - 16A	-	2x4+T - 32A
Tension 230V- 3+T	N° x mm² / A	3x2,5+T - 20A	-	3x4+T - 32A	-	3X6+T - 40A	-	3X6+T - 40A	-	3x16+T - 63A	3x2,5+T - 20A
Tension 400V - 3 + N + T	N° x mm² / A	4x1,5+T - 16A	-	4x1,5+T - 16A	-	4x4+T - 32A	-	4x4+T - 32A	-	4x4+T - 32A	4x1,5+T - 16A
Steam inlet (Steam model)	inch	1/2"		1/2"		1/2"	1/2"	1/2"	1/2"	3/4"	3/4"
Maxium steam consumtion (Steam model)	Kg/h	7		8,5		12		12		15	
Water inlet	inch	3/4"		3/4"		3/4"		3/4"		3/4"	
Water main pressuer	Kgs/cm²	02-04		02-04		02-04		02-04		02-04	
Maxium Water Consumption*	Lit/h	71,4*		88,8*		118,3*		145*		175,5*	
Drain	mm/inch	3"		3"		3"		3"		3"	
Drainge Capacity	Lit/min	200		200		200		200		200	
DIMENSIONS / PACKING DIMENSIONS											
Net Width/Gross Width	mm	692 / 738		788 / 850		884 / 945		884 / 945		979 / 1.045	
Net Depth/Gross Depth	mm	830 / 975		869 / 1.015		913 / 1.030		1.003 / 1.115		1.080 / 1.210	
Net Height / Gross Height	mm	1.185 / 1.440		1.307 / 1.600		1.405 / 1.680		1.405 / 1.680		1.550 / 1.810	
Net Weight / Gross Weight	kg	198 / 230		236 / 274,5		344,5 / 388		360 / 403,5		524,5 / 548,5	
Volume	m³	1,03		1,38		1,63		1,77		2,28	

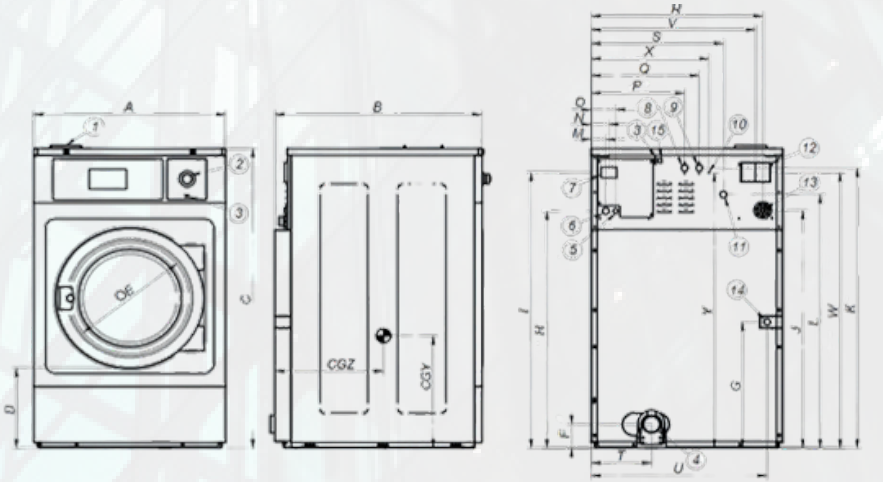

1. Soap dispenser
2. Emergency stop
3. USB port
4. Drain
5. Electric connection to liquid soap pumps
6. Electrical connection
7. Main switch
8. Auxiliar water inlet
9. Hot water inlet
10. Equipotential connection
11. Cold water inlet
12. Steam output
13. Liquid soap connection
14. Steam connection
15. Ethernet port

		A	B	C	D	E	F	G	H	I	J	K	L	M	N	O	P	Q	R	S	T	U	V	W	X	Y	CGY	CGZ
WED-11	mm	692	830	1 185	370	373	125	354	913	1 085	916	1 100	985	61	74	101	292	352	610	448	226	626	580	1 080	442	1 145	424	577
WED-14	mm	788	869	1 307	440	373	125	385	1 034	1 202	1 037	1 221	1 106	61	74	101	385	445	706	544	243	716	676	1 202	485	1 291	450	651

HIGH SPIN WASHERS
WED SERIES
35C-45C-60C-80C-100C-120C
DANUBE

High spin washers from **35 to 120 kg** offer high performance to meet the needs of industrial laundries where energy efficiency and productivity are a priority.

MODELS
1. WED-35C ET2
2. WED-45C ET2
3. WED-60C ET2
4. WED-80C ET2
5. WED-100C ET2
6. WED-120C ET2



EASY TOUCH 2
- 7" touchscreen, user-friendly and fully programmable.
- Connection USB. Free software online for programming, telemetry, data analysis...
- Videos display (ads, instructions...)
- 37 available languages/ 8 dosingsignals as standard.

G FACTOR
- High G factor: Reduced residual moisture, reduced dryingtime, energy saving.

EFFICIENCY
- Optimized consumption: automatic or manual adjustment of water levels and detergents according to the load.
- Water Saving system:3 configuable levels of savings.
- Ready for water recovery tanks **AQUABAC.**

VERSATILITY
- ELECTRIC<>HOT WATER
- MAKE TOORDER: possibility to customize
- WET CLEANING as standard

CONNECTIVITY
- Communication Danube Online - IoT as standard
- Remote technical service
- Management of laundry
- Multi-payment system

ERGONOMICS
- Big aluminium door
- Easy door lock system

MAINTENANCE
- Hinged panel: easy access to part.
- Technical menu: statistics, errors...

OTHERS
- Free standing: no anchoring to the floor.
- Stainless steel vat and drum, skinplate outer casing.
- 3 water inlets..
- Detergents box with compartments.
- Imbalance controlled by frequency inverter.
- CE standards and KIWA for REG4 standards.

FEATURES



Videos on Display
(ads, instructions..)

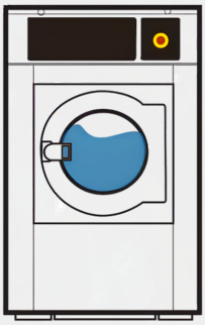

Low water consumption & intelligent Weighing system.



Aqua Flow through filter and Recirculation pump

WED SERIES 35C-45C-60C-80C-100C-120C
DATA SHEET

DRUM	Unit	WED-35C	WED-45C	WED-60C	WED-80C	WED-100C	WED-120C-ET2
Capacity 1/9	Kg	39	50	65	85	105	130
Capacity 1/10	Kg	35	45	59	77	95	115
Volume	l	350	450	590	770	950	1.15
Diameter	mm	860	860	1.048	1.048	1.36	1.36
Depth	mm	602	720	680	892	637	775
GENERAL DETAILS							
Washing Spped/Spining Speed	r.p.m.	42,5 / 966	42,5 / 966	38 / 875	38 / 875	34 / 678	34 / 678
G Factor	-	450	450	450	450	350	350
Maximum force transmitted	KN	7,36 ±2,45	7,36 ±2,45	18 ±4,2	23 ±4,8	37,77 ±5,25	37,77 ±5,25
Frequency-dynamic force	Hz	14,3	14,3	12,66	12,66	11,33	11,33
Noise level	dB	< 70	< 70	< 70	< 70	< 70	< 70
Coin Laundry Version	-	YES	YES	NO	NO	NO	NO
Double Drain	-	OPT.	OPT.	OPT.	OPT.	OPT.	OPT.
Weighing System	-	OPT.	OPT.	OPT.	OPT.	OPT.	OPT.
Tilting System	-	NO	NO	OPT.	OPT.	OPT.	OPT.
DOOR							
Height door bottom	mm	698	698	810	810		945
Diameter	mm	560	560	560	560	700	700
POWER							
Motor	kW	6	6	15	15	15	15
Electric heating power	kW	21	21	36	48 / 36**	-	-
Total Electric power (electric model)	kW	22	22	39	51 / 39**	-	-
Total electric power (hw, steam model)	barG	6	6	15	15	15	15

CONNECTIONS		E	HW/S	E	HW/S	E	HW/S	E	HW/S	HW/S	HW/S
Tension 110V- 1 +N+T	N° x mm² / A	-	-	-	-	-	-	-	-	-	-
Tension 230V-1+N+T	N° x mm² / A	-	-	-	-	-	-	-	-	-	-
Tension 230V- 3+T	N° x mm² / A	3x16+T - 63A	3x4+T - 32A	3x16+T - 63A	3x4+T - 32A	3x25+T - 100A	3X6+T - 40A	3x25+T - 100A	3X6+T - 40A	3x16+T - 63A	3x16+T - 63A
Tension 400V - 3 + N + T	N° x mm² / A	4x6+T - 40A	4x1,5+T - 16A	4x6+T - 40A	4x1,5+T - 16A	4x16+T - 63A	4x10+T - 50A	4x25+T - 80A	4x10+T - 50A	4x6+T - 40A	4x6+T - 40A
Steam inlet (Steam model)	inch	3/4"		3/4"		3/4"		3/4"		1-1/4"	1-1/4"
Maxium steam consumtion (Steam model)	Kg/h	18		18		21		25		26,5	26,5
Water inlet	inch	3/4"		3/4"		1"		1"		1-1/2"	1-1/2"
Water main pressuer	Kgs/cm²	02-04		02-04		02-04		02-04		02-04	02-04
Maxium Water Consumption*	Lit/h	261,3*		335,9*		598*		781*		1.058*	1.254*
Drain	mm/inch	3"		3"		3"		3"		4"	4"
Drainge Capacity	Lit/min	200		200		200		200		500	500
DIMENSIONS / PACKING DIMENSIONS											
Net Width/Gross Width	mm	1.095 / 1.205		1.095 / 1.205		1.420 / 1.600		1.420 / 1.600		1.836 / 1.940	1.836 / 1.940
Net Depth/Gross Depth	mm	1.184 / 1.330		1.304 / 1.440		1.433 / 1.595		1.645 / 1.805		1.710 / 2.030	1.832 / 2.030
Net Height / Gross Height	mm	1.767 / 1.850		1.767 / 1.850		1.890 / 1.930		1.890 / 1.930		2.245 / 2.290	2.245 / 2.290
Net Weight / Gross Weight	kg	735 / 786		747 / 853		1.454 / 1.544		1.800 / 2.000		2.300 / 2.600	2.762 / 3.058
Volume	m³	2,7		3,3		4,9		5,6		9	9

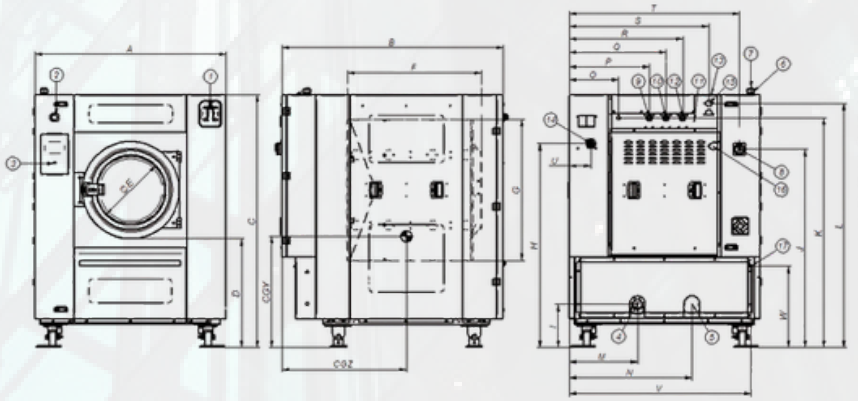

1. Soap dispenser
2. Emergency stop
3. USB port
4. Drain 1
5. Drain 2
6. Electric connection to liquid soap pumps
7. Electrical connection
8. Main switch
9. Auxiliar water inlet
10. Hot water inlet
11. Equipotential connection
12. Cold water inlet
13. Steam output
14. Liquid soap connection
15. Steam connection
16. Air intake
17. Ethernet port

		A	B	C	D	E	F	G	H	I	J	K	L	M	N	O	P	Q	R	S	T	U	V	W	CGY	CGZ
WED-100C	mm	1 836	1 710	2 245	945	700	792	1 350	1 740	336	1 781	2 038	2 110	675	1 092	494	634	774	954	994	1 239	1 646	165	2 049	853	1 025
WED-120C	mm	1 836	1 832	2 245	945	700	792	1 350	1 740	336	1 781	2 038	2 110	675	1 092	494	634	774	954	994	1 239	1 646	165	2 049	853	1 130

NORMAL SPIN WASHERS
WEN SERIES 11-14-18-22-28 ET2
DANUBE

Normal spin washers from **11 to 28 kg** of hard mounted washer extractors, with a high G-factor compared with equivalent models usually found on the market, combines the latest technology with quality components and materials.

MODELS
1. WEN-11 ET2
2. WEN-14 ET2
3. WEN-18 ET2
4. WEN-22 ET2
5. WEN-28 ET2



EASY TOUCH 2
- 7" touchscreen, user-friendly and fully programmable.
- Connection USB. Freesoftware online for programming, telemetry, data analysis...
- Videosdisplay (ads, instructions...)
- 37 available languages/8 dosingsignals as standard.

G FACTOR
- G factor200/150 (WED-60C/80C)

EFFICIENCY
- Optimized consumption: automatic or manual adjustment of water levels and detergents according to the load.
- Water Saving system: 3 configuable levels of savings.

VERSATILITY
- OPL <> SELF-SERVICE
- MAKE TOORDER: possibility to customize
- WET CLEANING as standard

CONNECTIVITY
- Communication Danube Online - IoT as standard
- Remote technical service
- Management of laundry
- Multi-payment system

ERGONOMICS
- Big aluminium door
- Easy door lock system

MAINTENANCE
- Hinged Panel: easy access to part.
- Technical Menu: statistics, errors...

OTHERS
- Hard mounted washers to be anchored to the floor.
- Stainless steel vat and drum, skinplate outer casing.
- 3 water inlets..
- Detergents box with compartments.
- Imbalance controlled by frequency inverter.
- CE standards and KIWA for REG4 standards.

FEATURES

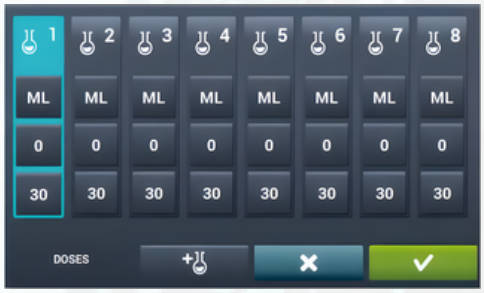

8 Dosing Signals as Standard
+Optional 6 Extra Dosing Signals

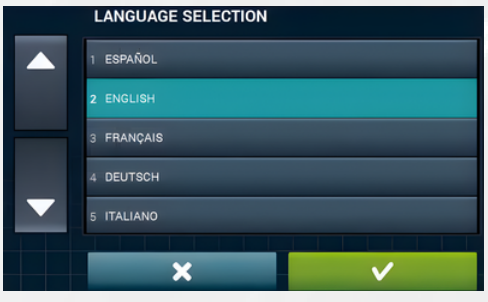

37 Laungauges Accessible to everyone.



Easy Opening/closing System
Door Lock

WEN SERIES 11-14-18-22-28 ET2
DATA SHEET

DRUM	Unit	WEN-11 ET2	WEN-14 ET2	WEN-18 ET2	WEN-22 ET2	WEN-28 ET2
Capacity 1/9	Kg	11	14	20	25	31
Capacity 1/10	Kg	10	13	18	22	28
Volume	l	100	130	180	220	280
Diameter	mm	620	620	700	700	770
Depth	mm	330	430	470	560	585
GENERAL DETAILS						
Washing Spped/Spining Speed	r.p.m.	53 / 759	53 / 759	50 / 714	50 / 714	48 / 682
G Factor	-	200	200	200	200	200
Maximum force transmitted	KN	2,0 ±3	2,31 ±4	2,63 ±5	3,04 ±5	3,68 ±6
Frequency-dynamic force	Hz	8,93	8,93	8,42	8,42	8,02
Noise level	dB	< 70	< 70	< 70	< 70	< 70
Coin Laundry Version	-	YES	YES	YES	YES	YES
Double Drain	-	KIT	KIT	OPT.	OPT.	OPT.
Weighing System	-	NO	NO	NO	NO	NO
Tilting System	-	YES	YES	YES	YES	YES
DOOR						
Height door bottom	mm	570 / 310	570 / 310	655 / 348	655 / 348	700 / 400
Diameter	mm	373	373	460	460	460
POWER						
Motor	kW	1,1	1,1	2,2	2,2	4
Electric heating power	kW	6	9	12	12	18
Total Electric power (electric model)	kW	6,25	9,5	12,75	12,75	19,2
Total electric power (hw, steam model)	barG	1,1	1,1	2,2	2,2	4
CONNECTIONS		E / HW/S	E / HW/S	E / HW/S	E / HW/S	E / HW/S
Tension 110V- 1 +N+T	N° x mm² / A	- / -	- / -	- / -	- / -	- / -
Tension 230V-1+N+T	N° x mm² / A	2x6+T - 40A / 2x1,5+T - 16A	2x10+T - 50A / 2x1,5+T - 16A	2x16+T - 63A / 2x1,5+T - 16A	2x16+T - 63A / 2x1,5+T - 16A	- / 2x4+T - 32A
Tension 230V- 3+T	N° x mm² / A	3x2,5+T - 20A / -	3x4+T - 32A / -	3X6+T - 40A / -	3X6+T - 40A / -	3x16+T - 63A / 3x2,5+T - 20A
Tension 400V - 3 + N + T	N° x mm² / A	4x1,5+T - 16A / -	4x1,5+T - 16A / -	4x4+T - 32A / -	4x4+T - 32A / -	4x4+T - 32A / 4x1,5+T - 16A
Steam inlet (Steam model)	inch	1/2"	1/2"	1/2" / 1/2"	1/2" / 1/2"	3/4" / 3/4"
Maxium steam consumtion (Steam mod	Kg/h	7	8,5	12	12	15
Water inlet	inch	3/4"	3/4"	3/4"	3/4"	3/4"
Water main pressuer	Kgs/cm²	02-04	02-04	02-04	02-04	46114
Maxium Water Consumption*	Lit/h	61,5*	78,8*	120*	120*	164,8*
Drain	mm/inch	3"	3"	3"	3"	3"
Drainge Capacity	Lit/min	200	200	200	200	200
DIMENSIONS / PACKING DIMENSIONS						
Net Width/Gross Width	mm	719 / 782	719 / 782	788 / 850	788 / 850	884 / 945
Net Depth/Gross Depth	mm	755 / 890	856 / 990	935 / 1.013	1.035 / 1.106	1.075 / 1.230
Net Height / Gross Height	mm	1.165 / 1.400	1.165 / 1.400	1.307 / 1.583	1.307 / 1.583	1.340 / 1.583
Net Weight / Gross Weight	kg	198 / 231,6	210 / 245	272 / 309	295 / 335	403 / 431
Volume	m³	0,63 / 0,97	0,71 / 1,08	0,96 / 1,36	1,06 / 1,5	1,27 / 1,84

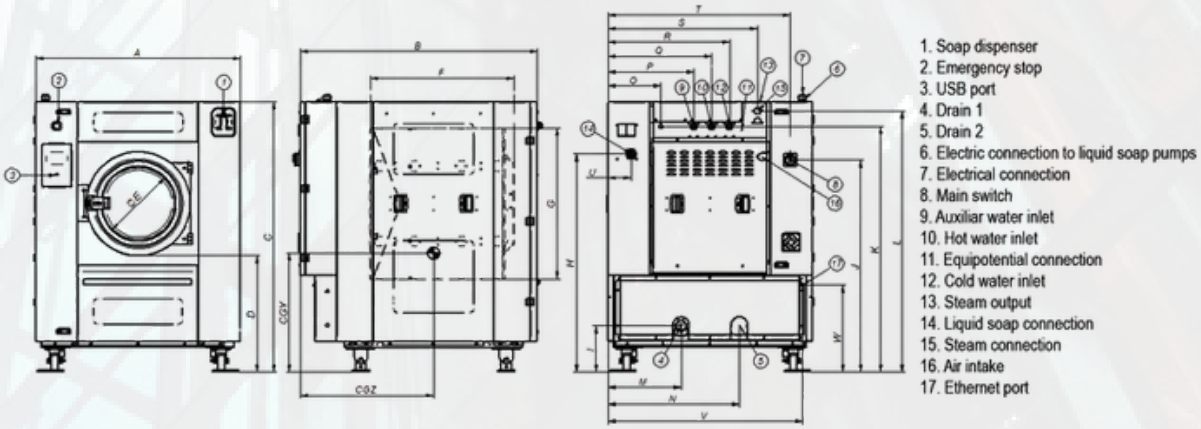

1. Soap dispenser
2. Emergency stop
3. USB port
4. Drain 1
5. Drain 2
6. Electric connection to liquid soap pumps
7. Electrical connection
8. Main switch
9. Auxiliar water inlet
10. Hot water inlet
11. Equipotential connection
12. Cold water inlet
13. Steam output
14. Liquid soap connection
15. Steam connection
16. Air intake
17. Ethernet port

		A	B	C	D	E	F	G	H	I	J	K	L	M	N	O	P	Q	R	S	T	U	V	W	CGY	CGZ
WED-100C	mm	1 836	1 710	2 245	945	700	792	1 350	1 740	336	1 781	2 038	2 110	675	1 092	494	634	774	954	994	1 239	1 646	165	2 049	853	1 025
WED-120C	mm	1 836	1 832	2 245	945	700	792	1 350	1 740	336	1 781	2 038	2 110	675	1 092	494	634	774	954	994	1 239	1 646	165	2 049	853	1 130

NORMAL SPIN WASHERS
WEN SERIES 35C-45C-60C-80C
DANUBE

The **WEN** range of normal spin washer extractors from **35 to 80 KG** performs the most demanding tasks in any type of laundry.

MODELS
1. WEN-35C ET2
2. WEN-45C ET2
3. WEN-60C ET2
4. WEN-80C ET2



EASY TOUCH 2
- 7" touchscreen, user-friendly and fully programmable.
- Connection USB. Freesoftware online for programming, telemetry, data analysis...
- Videosdisplay (ads, instructions...)
- 37 available languages 8 dosingsignals as standard.

G FACTOR
- G factor200/150 (WED-60C/80C)

EFFICIENCY
- Optimized consumption: automatic or manual adjustment of water levels and detergents according to the load.
- Water Saving System: 3 configuable levels of savings.

VERSATILITY
- ELECTRIC<>HOT WATER
- OPL <> SELF-SERVICE
- MAKE TOORDER: possibility to customize
- WET CLEANING as standard

CONNECTIVITY
- Communication Danube Online - IoT as standard
- Remotetechnical service
- Management of laundry
- Multi-payment system

ERGONOMICS
- Bigaluminium door
- Easydoorlock system

MAINTENANCE
- Hingedpanel: easy access to part.
- Technicalmenu: statistics, errors...

OTHERS
- Hard mounted washers to be anchored to the floor.
- Stainless steel vat and drum, skinplate outer casing.
- 3 water inlets..
- Detergents box with compartments.
- Imbalance controlled by frequency inverter.
- CE standards and KIWA for REG4 standards.

FEATURES

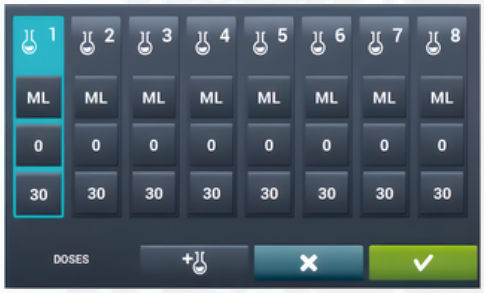

8 Dosing Signals as Standard
+Optional 6 Extra Dosing Signals

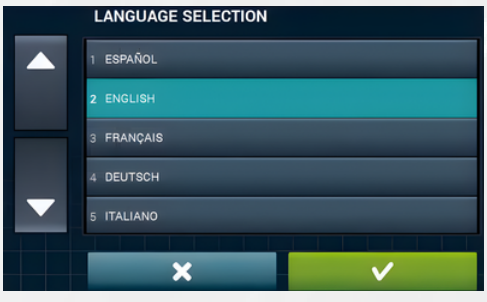

37 Laungauges Accessible to everyone.



Easy Opening/closing System
Door Lock

WEN SERIES 35C-45C-60C-80C ET2
DATA SHEET

DRUM	Unit	WEN-35C		WEN-45C		WEN-60C		WEN-80C	
Capacity 1/9	Kg	39		47		65		85	
Capacity 1/10	Kg	35		42		59		77	
Volume	l	350		450		600		800	
Diameter	mm	860		860		1.048		1.048	
Depth	mm	602		720		684		936	
GENERAL DETAILS									
Washing Spped/Spining Spee	r.p.m.	45 / 644		45 / 644		42,5 / 505		42,5 / 505	
G Factor	-	200		200		150		150	
Maximum force transmitted	KN	4,59 ±8		5,9 ±8		9,12 ±15		10,17 ±15	
Frequency-dynamic force	Hz	7,58		7,58		6,93		6,93	
Noise level	dB	< 70		< 70		< 70		< 70	
Coin Laundry Version	-	YES		YES		YES		YES	
Double Drain	-	OPT.		OPT.		OPT.		OPT.	
Weighing System	-	NO		NO		NO		NO	
Tilting System	-	YES		YES		NO		NO	
DOOR									
Height door bottom	mm	735 / 440		735 / 440		900 / 540		900 / 540	
Diameter	mm	560		560		560		560	
POWER									
Motor	kW	4		6		5,5		7,5	
Electric heating power	kW	21		21		36		48/36**	
Total Electric power (electric r	kW	22		22		38		50,5/38,5**	
Total electric power (hw, stear	barG	4		6		5,5		7,5	
CONNECTIONS		E	HW/S	E	HW/S	E	HW/S	E	HW/S
Tension 110V- 1 +N+T	N° x mm² / A	-	-	-	-	-	-	-	-
Tension 230V-1+N+T	N° x mm² / A	-	2x4+T - 32A	-	-	-	-	-	-
Tension 230V- 3+T	N° x mm² / A	3x16+T - 63A	3x2,5+T - 20A	3x16+T - 63A	3x4+T - 32A	3x25+T - 100A	3x4+T - 32A	3x25+T - 100A	3x4+T - 32A
Tension 400V - 3 + N + T	N° x mm² / A	4x6+T - 40A	4x1,5+T - 16A	4x6+T - 40A	4x1,5+T - 16A	4x16+T - 63A	4x1,5+T - 16A	4x25+T - 80A	4x4+T - 20A
Steam inlet (Steam model)	inch	3/4"	3/4"	3/4"	3/4"	3/4"	3/4"	3/4"	3/4"
Maxium steam consumtion (S	Kg/h	18		21		21		21	
Water inlet	inch	3/4"		3/4"		1"		1"	
Water main pressuer	Kgs/cm²	02-04		02-04		02-04		02-04	
Maxium Water Consumption*	Lit/h	199,6*		256,6*		627,9*		814,5*	
Drain	mm/inch	3"		3"		3"		3"	
Drainge Capacity	Lit/min	200		200		200		200	
DIMENSIONS / PACKING DIMENSIONS									
Net Width/Gross Width	mm	979/ 1.045		979/ 1.125		1.225 / 1.335		1.225 / 1.335	
Net Depth/Gross Depth	mm	1.155 / 1.280		1.325 / 1.440		1.315 / 1.440		1.492 / 1.660	
Net Height / Gross Height	mm	1.411 / 1.655		1.411 / 1.640		1.640 / 1.860		1.640 / 1.860	
Net Weight / Gross Weight	kg	476 / 510		600 / 670		792 / 878		871 / 963	
Volume	m³	1,59 / 2,2		1,83 / 2,6		2,64 / 3,6		2,99 / 4,12	

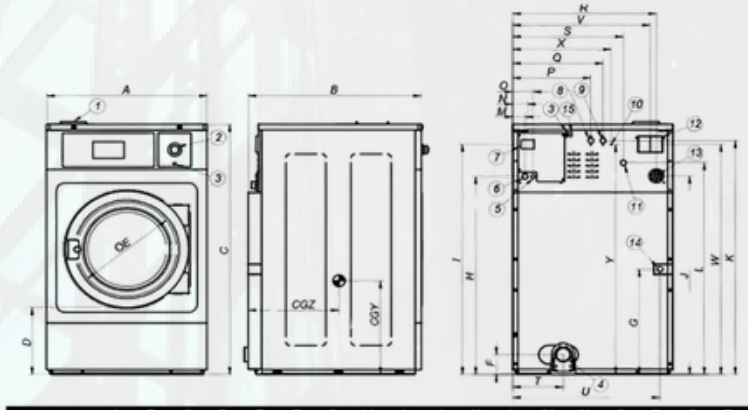

1. Soap dispenser
2. Emergency stop
3. USB port
4. Drain
5. Electric connection to liquid soap pumps
6. Electrical connection
7. Main switch
8. Auxiliar water inlet
9. Hot water inlet
10. Equipotential connection
11. Cold water inlet
12. Blur output / water overload
13. Liquid soap connection
14. Steam connection
15. Ethernet port

		A	B	C	D	E	F	G	H	I	J	K	L	M	N	O	P	Q	R	S	T	U	V	W	X	Y	CGY	CGZ
WEN-60C	mm	1 225	1 315	1 640	540	560	140	984	1 368	1 536	1 306	1 551	1 318	61	74	101	651	731	1 110	869	270	1 163	1 080	1 470	992	1 595	644	972
WEN-80C	mm	1 225	1 492	1 640	540	560	140	984	1 368	1 536	1 306	1 551	1 318	61	74	101	651	731	1 110	869	270	1 163	1 080	1 470	992	1 595	644	750

BARRIER WASHERS
MED SERIES 16-22 ET2
DANUBE

The MEDICAL range of **MED 16 and 22 kg** barrier washers is particularly well suited to small establishments where hygiene is paramount.

- Their skinplate outer casing makes them easy to clean and prevents microbial growth.

MODELS
1. MED-16 ET2
2. MED-22 ET2



EASY TOUCH 2

- 7" touchscreen, user-friendly and fully programmable.
- Connection USB. Freesoftware online for programming, telemetry, data analysis...
- Videosdisplay (ads, instructions...)
- 37 available languages 8 dosingsignals as standard.

FEATURES

- Automatic positionning of drum, drum lock with optional electric brake.
- 2 water inlets
- WET CLEANING, telemetry as standard
- Dual heating (electric - steam) model available
- G FACTOR 350

EFFICIENCY

- Optimized consumption: automatic or manual adjustment of water levels and detergents according to the load.
- Ready for water recovery tanks: AQUABAC.
- High G factor: reduced residual moisture, reduced drying time.
- Water Saving system: 3 configurable levels of savings.

CONNECTIVITY

- Danube Online communication - IoT as standard
- Remote technical service
- Laundry management

ERGONOMICS

- Hugeloading and unloadingdoors opening
- Easydrum opening bypushbutton
- Loading height (670 mm fromdoor base)

MAINTENANCE

- Electric elements on left side,mechanical ones on right side, connections on the top (protected from detergents and water splashes).
- Central drain as standard
- Technical menu: statistics, alarms, autotest, data recovery for technicians and maintenance

OTHERS

- 2 opposed doors/Grey skin plate outer casing
- Stainless steel AISI 304 top panel, vat and drum
- Electronic control of imbalance with frequency inverter
- Electric, steam or dual heating/CE approved

FEATURES



Touch Screen on Both Sides of the machine.
8 Dosing Signals as Standard
+Optional 6 Extra Dosing Signals



3 Water Inlets

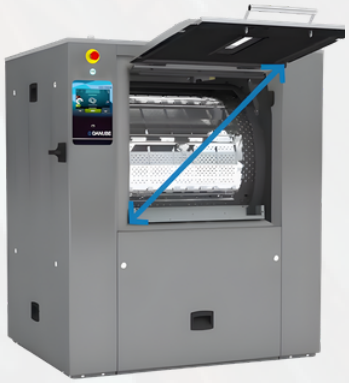

Huge Doors Opening

MED SERIES 16-22 ET2
DATA SHEET

DRUM	Unit	MED-16 ET2		MED 22 ET2	
Capacity 1/9	Kg	18		24,5	
Capacity 1/10	Kg	16		22	
Volume	l	158		220	
Diameter	mm	633		633	
Depth	mm	500		700	
GENERAL DETAILS					
Washing Spped/Spining Speed	r.p.m.	45/1.000		45/1.000	
G Factor	-	350		350	
Microprocessor ET2	KN	7"		7"	
Double Screen	Hz	OPT.		OPT.	
Motor Break	dB	OPT.		OPT.	
double drainage	-	OPT.		OPT.	
DOOR					
Drum opening Dimension	mm	400 x 315		400 x 315	
Vat opening Dimension	mm	455 x 415		455 x 415	
Height door bottom	mm	670		670	
POWER					
Motor	kW	2,20		2,20	
Electric heating power	kW	12		18	
Total Electric power (electric model)	kW	14,20		20,20	
Total electric power (hot water mod)	kW	2,20		2,20	
Total electric power (steam mod)	kW	2,20		2,20	
CONNECTIONS		E	HW/S	E	HW/S
Tension 230V-1+N+T 50/60 Hz	N° x mm² / A	N/A	3 x 1,5 / 6A	N/A	3 x 1,5 / 6A
Tension 230V- 3+T 50/60 Hz	N° x mm² / A	4 x 10 / 40A	N/A	4 x 10 / 50A	N/A
Tension 400V - 3 + N + T	N° x mm² / A	5 x 6 / 25A	N/A	5 x 6 / 32A	N/A
Steam inlet (Steam model)	inch	20 / 27		20 / 27	
Steam pressure	Kg/h	04-08		04-08	
Water inlet	inch	20 / 27		20 / 27	
Water main pressuer	Kgs/cm²	03-05		03-05	
Maxium Water Consumption*	Lit/h	144		198	
Drain	mm/inch	3"		3"	
Drainge Capacity	Lit/min	200		200	
DIMENSIONS / PACKING DIMENSIONS					
Net Width/Gross Width	mm	1.056 / 1.072		1.256 / 1.262	
Net Depth/Gross Depth	mm	1.082 / 1.102		1.082 / 1.102	
Net Height / Gross Height	mm	1.382 (1.426**) / 1.530		1.382 (1.426**) / 1.530	
Net Weight / Gross Weight	kg	438 / 459		471 / 494	
Volume	m³	1,58 / 1,81		1,88 / 2,13	

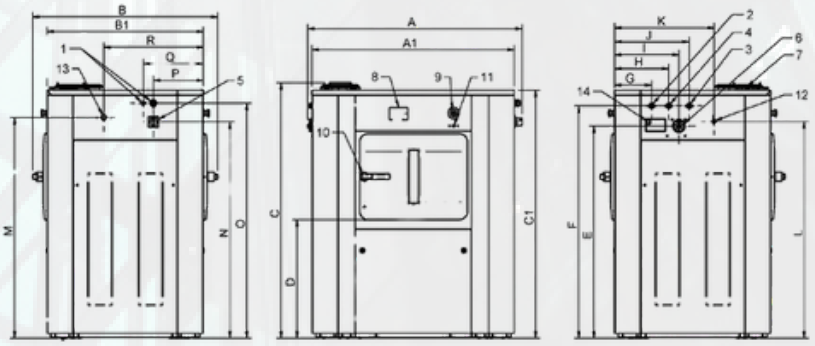

1. Electrical connection
2. Hot water
3. Cold water
4. Soft water
5. Main switch
6. Liquid products inlet
7. Detergent box (option)
8. Control panel
9. Emergency stop
10. Door opening
11. USB port
12. Pumps connection
13. Steam inlet
14. Exhaust

	A	B	C	A1	B1	C1	D	E	F	G	H	I	J	K	L	M	N	O	P	Q	R
MED-16	1 056	1 082	1 426	984	914	1 385	661	1 184	1 296	217	317	377	437	582	1 209	1 231	1 207	1 311	292	352	582
MED-22	1 256	1 082	1 426	1 184	914	1 385	661	1 184	1 296	217	317	377	437	582	1 209	1 231	1 207	1 311	292	352	582

BARRIER WASHERS
DBW SERIES-27-35-50-70 ET2
DANUBE

This range of **DBW 27, 35, 50 and 70 kg** barrier washers, equipped with the Easy Touch 2 microprocessor with a large, fully programmable touch screen.

MODELS
1. DBW-27 ET2
2. DBW-35 ET2
3. DBW-50 ET2
4. DBW-70 ET2



EASY TOUCH 2
- 7" touchscreen, user-friendly and fully programmable.
- Connection USB. Freesoftware online for programming, telemetry, data analysis...
- Videosdisplay (ads, instructions...)
- 37 available languages 8 dosingsignals as standard.

FEATURES
- Automatic positionning of drum with motor brake.
- 3 waterinlets
- WET CLEANING, telemetry as standard
- Dual heating (electric - steam) model available
- G FACTOR 375

EFFICIENCY
- Optimized consumption: automatic or manual adjustment of water levels and detergents according to the load.
- Ready for water recovery tanks: AQUABAC.
- High G factor: reduced residual moisture, reduced drying time.
- Water Saving system: 3 configurable levels of savings.

CONNECTIVITY
- Danube Online communication - IoT as standard
- Remote technical service
- Laundry management

ERGONOMICS
- Hugeloading and unloadingdoors opening
- Easydrum opening bypushbutton
- Loading height (800 mmfrom door base)
- Pullman drum option (DBW-27 to 50): make easier the loading and unloading

MAINTENANCE
- Electric elements on left side,mechanical ones on right side, connections on the top (protected from detergents and water splashes).
- Central drain as standard
- Technical menu: statistics, alarms, autotest, data recovery for technicians and maintenance

OTHERS
- 2 opposed doors/Grey skin plate outer casing
- Stainless steel AISI 304 top panel, vat and drum
- Electronic control of imbalance with frequency inverter
- Electric, steam or dual heating/CE approved

FEATURES



Touch Screen on Both Sides of the machine.
8 Dosing Signals as Standard
+Optional 6 Extra Dosing Signals



3 Water Inlets

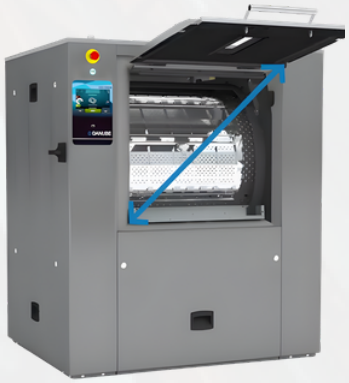

Huge Doors Opening

DBW SERIES-27-35-50-70 ET2
DATA SHEET

DRUM	Unit	DBW-27 ET2		DBW-35 ET2		DBW-50 ET2		DBW-70 ET2	
Capacity 1/9	Kg	30		38		54		77,7	
Capacity 1/10	Kg	27		35		49		70	
Volume	l	266		347		489		694	
Diameter	mm	800		800		800		800	
Depth	mm	530		690		974		1.38	
GENERAL DETAILS									
Washing Spped/Spining Speed	r.p.m.	45/920		45/920		45/920		45/920	
G Factor	-	375		375		375		375	
Microprocessor ET2	-	7"		7"		7"		7"	
Double Screen	-	STD		STD		STD		STD	
Motor Break	-	STD		STD		STD		STD	
Double Drain	-	OPT.		OPT.		OPT.		OPT.	
DOOR									
Drum opening Dimension	mm	480 x 515		640 x 515		640 x 515		640 x 515	
Vat opening Dimension	mm	542 x 650		700 x 650		700 x 650		1402 x 650	
Height door bottom	mm	800		800		800		800	
POWER									
Motor	kW	4		4		5,5		7,5	
Electric heating power	kW	18		27		36		45	
Total Electric power (electric model)	kW	22		31		41,5		52,5	
Total Electric power (hot water mod)	kW	4		4		5,5		7,5	
Total electric power (steam model)	kW	4		4		5,5		7,5	
CONNECTIONS		E/DUAL	S	E/DUAL	S	E/DUAL	S	E/DUAL	S
Tension 230V-1+N+T 50/60 Hz	N° x mm² / A	N/A	N/A	N/A	N/A	N/A	N/A	N/A	N/A
Tension 230V- 3+T 50/60 Hz	N° x mm² / A	4 x 16 / 63A	4 x 2,5 / 16A	4 x 16 / 80A	4 x 2,5 / 16A	4 x 25 / 125A	4 x 2,5 / 16A	4 x 35 / 160A	4 x 2,5 / 16A
Tension 400V - 3 + N + T 50/60 Hz	N° x mm² / A	5 x 10 / 40A	5 x 2,5 / 10A	5 x 10 / 50A	5 x 2,5 / 10A	5 x 16 / 63A	5 x 2,5 / 10A	5 x 16 / 80A	5 x 2,5 / 10A
Steam inlet (Steam model)	mm	20 / 27		20 / 27		20 / 27		20 / 27	
Steam Pressure	psi	58 - 116		58 - 116		58 - 116		58 - 116	
Water inlet	inch	3/4"		3/4"		1"		1"	
Water main pressuer	bar	03-05		03-05		03-05		03-05	
Maxium Water Consumption*	Lit/h	210		260		450		720	
Drain	mm/inch	80		80		80		80	
Drainge Capacity	Lit/min	200		200		200		200	
DIMENSIONS / PACKING DIMENSIONS									
Net Width/Gross Width	mm	1.264 (1.416**) / 1.464		1.422 (1.574**)/ 1.608		1.717 (1.869**)/ 1.903		2.124 (2.276**)/ 2.310	
Net Depth/Gross Depth	mm	1.195 / 1.300		1.195 / 1.300		1.195 / 1.300		1.195 / 1.300	
Net Height / Gross Height	mm	1.615 / 1.720		1.615 / 1.720		1.615 / 1.720		1.615 / 1.720	
Net Weight / Gross Weight	kg	886 / 906		926 / 946		1.063 / 1.085		1.190 / 1.220	
Volume	m³	3,27		3,60		150,3		182,4	



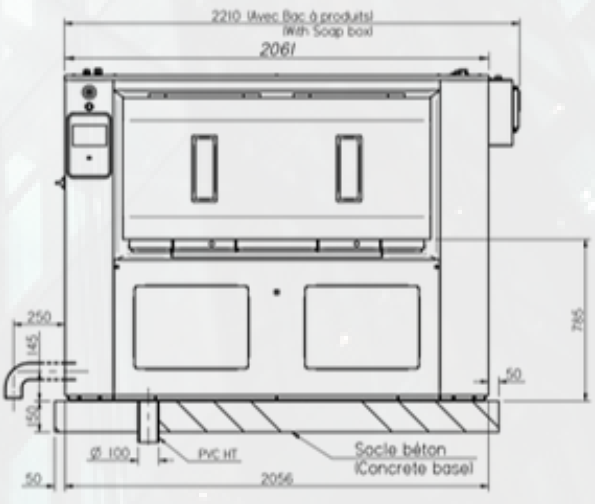



PULLMAN BARRIER WASHERS
AS SERIES-100 ETS
DANUBE

This model of barrier washer has a capacity of **100 kg** and guarantees high performance in terms of productivity and safety.

MODELS
1. AS-100 ET2



EASY TOUCH 2
- 7" touchscreen, user-friendly and fully programmable.
- Connection USB. Freesoftware online for programming, telemetry, data analysis...
- Videosdisplay (ads, instructions...)
- 37 available languages 8 dosingsignals as standard.

FEATURES
- Automatic positionning of drum with motor brake.
- 3 waterinlets
- WET CLEANING, telemetry as standard
- Dual heating (electric - steam) model available
- G FACTOR 375

EFFICIENCY
- Optimized consumption: automatic or manual adjustment of water levels and detergents according to the load.
- Ready for water recovery tanks: AQUABAC.
- High G factor: reduced residual moisture, reduced drying time.
- Water Saving system: 3 configurable levels of savings.

CONNECTIVITY
- Danube Online communication - IoT as standard
- Remote technical service
- Laundry management

ERGONOMICS
- Hugeloading and unloadingdoors opening
- Easydrum opening bypushbutton
- Loading height (800 mmfrom door base)
- Pullman drum option (DBW-27 to 50): make easier the loading and unloading

MAINTENANCE
- Electric elements on left side,mechanical ones on right side, connections on the top (protected from detergents and water splashes).
- Central drain as standard
- Technical menu: statistics, alarms, autotest, data recovery for technicians and maintenance

OTHERS
- 2 opposed doors/Grey skin plate outer casing
- Stainless steel AISI 304 top panel, vat and drum
- Electronic control of imbalance with frequency inverter
- Electric, steam or dual heating/CE approved

FEATURES



Touch Screen on Both Sides of the machine.
8 Dosing Signals as Standard
+Optional 6 Extra Dosing Signals



3 Water Inlets

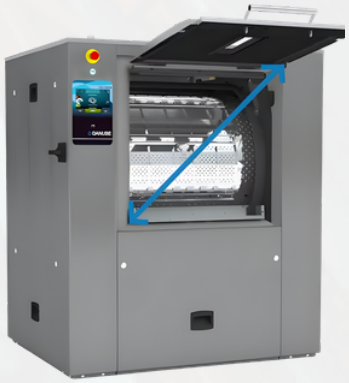

Huge Doors Opening

AS SERIES -100 ET2
DATA SHEET

DRUM	Unit	AS-100 ET2	
Capacity 1/9	Kg	100	
Capacity 1/10	Kg	90	
Volume	l	900	
Diameter	mm	1.05	
Depth	mm	1.032	
GENERAL DETAILS			
Washing Spped/Spining Speed	r.p.m.	45/750	
G Factor	-	325	
MIcroprocessor ET2	-	7"	
Double Screen	-	STD	
Motor Break	-	STD	
Double Drain	-	STD	
DOOR			
Drum opening Dimension	mm	900 x 500	
Vat opening Dimension	mm	960 x 700	
Height door bottom	mm	960	
POWER			
Motor	kW	15	
Electric heating power	kW	60	
Total Electric power (electric model)	kW	75	
Total Electric power (hot water mod)	kW	15	
Total electric power (steam model)	kW	15	
CONNECTIONS		E/DUAL	S
Tension 230V-1+N+T 50/60 Hz	N° x mm² / A	N/A	N/A
Tension 230V- 3+T 50/60 Hz	N° x mm² / A	4 x 50 / 200A	4 X 10 / 40A
Tension 400V - 3 + N + T 50/60 Hz	N° x mm² / A	5 x 25 / 120A	5 x 6 / 25A
Steam inlet (Steam model)	inch	3/4"	
Steam Pressure	psi	58 - 116	
Water inlet	inch	1"	
Water main pressuer	psi	43 - 72	
Maxium Water Consumption*	Lit/h	900	
Drain	mm	80	
Drainge Capacity	Lit/min	2 x 200	
DIMENSIONS / PACKING DIMENSIONS			
Net Width/Gross Width	mm	1.742 (1.894**) / 1.890	
Net Depth/Gross Depth	mm	1.468 / 1.540	
Net Height / Gross Height	mm	1.982 / 2.150	
Net Weight / Gross Weight	kg	1.900 / 1.958	
Volume	m³	5,06 / 6,26	

1. Electrical connection
2. Cold water inlet
3. Soft water inlet
4. Hot water inlet
5. Liquid products inlet
6. Main switch
7. Control panel
8. Emergency stop
9. Door opening
10. USB port
11. Dosing pumps connection
12. Steam inlet
13. Exhaust
14. Cold water detergent box
15. Compressed air inlet
16. Manual rotation
17. Compressed air steam valve
18. Ethernet port

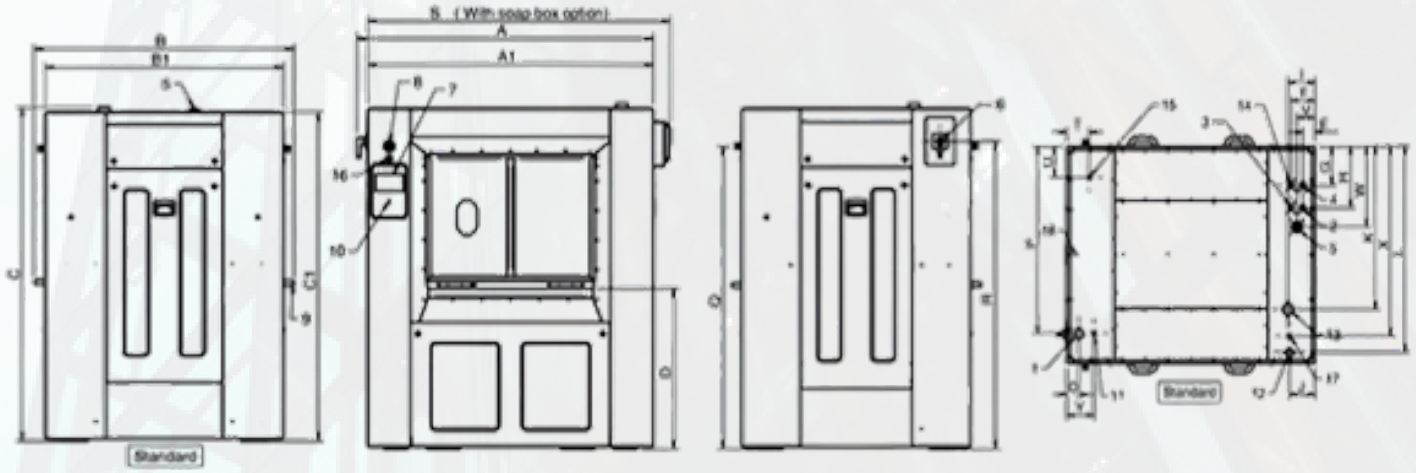

	A	B	C	A1	B1	C1	D	E	F	G	H	I	J	K	L	O	P	Q	R	S	T	U	V	W	X	Y
AS-100	1 742	1 468	1 982	1 677	1 346	1 954	921	82	162	262	382	183	172	1 013	1 279	83	1 163	1 737	1 765	1 777	150	192	122	502	1 179	183

HIGH SPIN WASHERS
LM SERIES 08-11-14-23 KG
IMESA

This range of **imesa LM 08, 11, 14 and 23 kg** high spin washers, equipped with the innovative IM11 computer touchscreen makes programming, use and maintenance extremely simple and intuitive.

MODELS
1. LM-8 KG
2. LM-11 KG
3. LM-14 KG
4. LM-23 KG



TOUCH SCREEN
- INNOVATIVE IM11 7" tilted capacitive touchscreen.
- Library with 15 stored wash cycles.

FEATURES
- High level of recyclability of materials and components.
- Compatible with central payment systems for self-service use (connection kit needed).
- 5 alternative heating methods: hot water, electric, Electric + steam, direct steam, indirect steam
- Balanced water fill: hot and cold water are mixed during the filling phase to save energy.

G FACTOR
- 350-400 G factor.

CONNECTIVITY
- Total control of wash cycles by wi-fi via the IM11, IMConnect portal and Laundry for You App.

DRUM SIZE
- Drum and outer drum made of stainless steel AISI 304 AS STANDARD. Front, top and side panels in INOX 304 ON REQUEST.

OTHERS
- No anchoring to the ground.
- Free of floor fastening.
- LM8: heating group 3x2000W std
- LM11: heating group 3x3000W std
- Programmable water, temperature, engine speed and rotation/break rate levels for total customization of washing cycles.

FEATURES



The innovative IM11 computer touchscreen makes programming, use and maintenance extremely simple and intuitive.

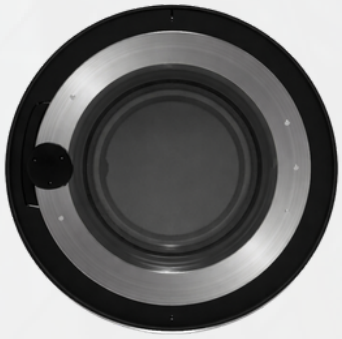

New oversized door, the largest in its category, for easier loading and unloading.



Washing programmes to satisfy the need for energy, water and detergent savings.

LM SERIES 08-11-14-18-23
DATA SHEET

TECHNICAL DATA	LM 8	LM 11	LM 14	LM 18	LM 23
Capacity1:9- 1:10	9 - 8 Kg (19.8 - 17.6lb)	12 - 11 Kg (26.4 - 24.2 lb)	16 - 14Kg (35.2-30.8lb)	20 - 18Kg (44.1-39.6lb)	24 - 23 Kg(52.9-50.6 lb)
Drum diameter Ø	535 mm (21 inch.)	535 mm (21 inch.)	700 mm (27.5 inch.)	700 mm (27.5 inch.)	700 mm (27.5 inch.)
Drum depth	360 mm (14.1 inch.)	470 mm (18.5 inch.)	365 mm (14.4 inch.)	470 mm (18.5 inch.)	560 mm (22 inch.)
Drum volume	81 lt	105 lt	141 lt	181 lt	216 lt
Load diameter Ø	380 mm (15 inch.)	380 mm (15 inch.)	380 mm (15 inch.)	380 mm (15 inch.)	380 mm (15 inch.)
Spin speed	1002 r.p.m.	1002 r.p.m.	915 r.p.m.	915 r.p.m	915 r.p.m.
G Factor	300	300	327	327	327
Air sound intensity	65 dB (A)	65 dB (A)	70 dB (A)	70 dB (A)	70 dB (A)
Heating leakage	5%	5%	5%	5%	5%
Dynamic load (frequency)	5890 N (16.7 Hz)	5890 N (16.7 Hz)	12854 N (15 Hz)	11247 N (15 Hz)	9640 N (15 Hz)
Cold water consumption*	50 l (1.7 ft³)	68 l (1.7 ft³)	92 l (3.2 ft³)	119 l (4.2 ft³)	152 l (5.3 ft³)
Hot water consumption*	14 l (0.5 ft³)	20 l (0.5 ft³)	27 l (0.9 ft³)	34 l (1.2 ft³)	44 l (1.5 ft³)
Water consumption*	64 l (2.2 ft³)	88 l (2.2 ft³)	119 l (4.2 ft³)	153 l (5.4 ft³)	196 l (6.9 ft³)
Drain flow	160 lt/min (5.6 ft³/min)	160 lt/min (5.6 ft³/min)	160 lt/min (5.6 ft³/min)	160 lt/min (5.6 ft³/min)	160 lt/min (5.6 ft³/min)
Machine dimension WxDxH (100 mm = 3.93 inch.)	720x821x1113 mm	720x933x1113 mm	880x905x1285 mm	880x1010x1285 mm	880x1100x1285 mm
Net weight	267,4 Kg (589.5 lb)	278,8 Kg (614.6 lb)	416 Kg (917 lb)	432 Kg (952.4 lb)	451,8 Kg (996 lb)
Packing dimension WxDxH (100 mm = 3.93 inch.)	760x940x1210 mm	760x1045x1210 mm	920x1150x1400 mm	920x1150x1400 mm	920x1150x1400 mm
Gross weight	276,4 Kg (609 lb)	289,7 Kg (638.7 lb)	431,1 Kg (950 lb)	447,3 Kg (985.5 lb)	467,1 Kg (1029.5 lb)
Gross weight wooden cage - wooden case	297 Kg (655 lb)	306-326 Kg (675-719 lb)	465-485 Kg (1025-1069 lb)	481-501 Kg (1060-1105 lb)	503-523 Kg (1109-1153 lb)
Packaging volume	0,86 mc (30.4 ft³)	0,96 mc (33.9 ft³)	1.5 mc (52.9 ft³)	1.5 mc (52.9 ft³)	1.5 mc (52.9 ft³)
STD. packed machines in to 20' container	36 pz. stackable	32 pz. stackable	12 pz.	12 pz.	12 pz.
STD. packed machines in to 40' container	74 pz. stackable	68 pz. stackable	26 pz.	26 pz.	26 pz.
DATA BY TYPE OF HEATING					
ElectricalHeating(electricmachines)	6 kW	9 kW	9 kW	12 kW	15 kW
Consumption* (electric machines)	1,5 kWh	1,5 kWh	1,5 kWh	1,5 kWh	1,6 kWh
Electric absorption (electric machines)	7,5 kW	10,5 kW	11 kW	14 kW	17 kW
3ph400V-480V(+N) / 3ph230V / 1ph230V (electric machines)	11 / 18 / 29 A	16 / 25 / 42 A	17 / 26 / 43 A	22 / 38 / 66 A	27 / 47 / 80 A
Steam heating consumption* (steam machines)	0,2 Kg (0.4 lb)	0,2 Kg (0.4 lb)	0,3 Kg (0.6 lb)	0,4 Kg (0.9 lb)	0,6 Kg (1.3 lb)
Electric consumption* (hot-water machines)	0,7 kWh	0,8 kWh	0,8 kWh	0,8 kWh	0,9 kWh
Electric absorption (hot-water-steam machines)	1,5 kW	1,5 kW	1,5 kW	1,5 kW	1,5 kW
3ph400V-480V(+N) / 3ph230V / 1ph230V (hot-water-steam machines)	- / - / 3 A	- / - / 3 A	6 / 6 / 10 A	6 / 6 / 10 A	6 / 6 / 12 A

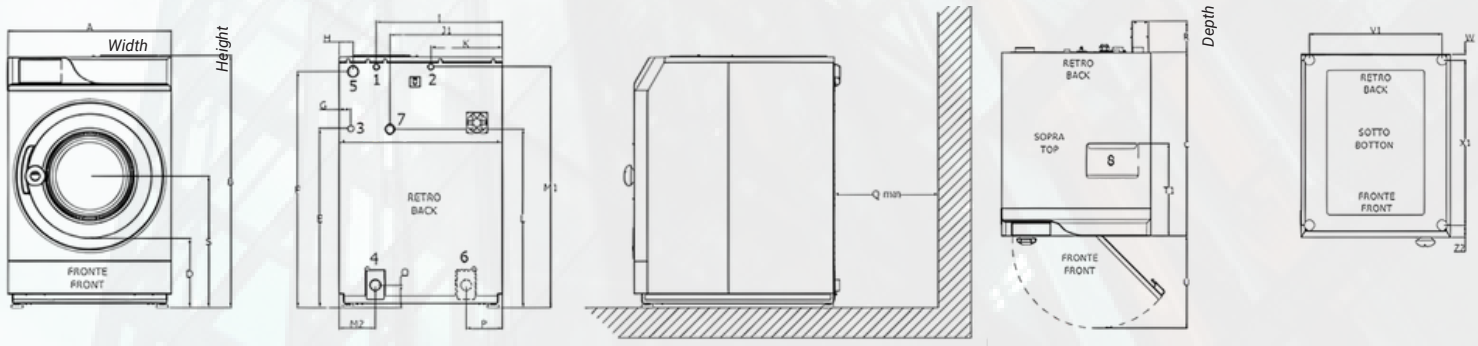

mm	A	B	C	D	E	F	G	H	I	J1	K	L	M1M2O	P	Q	R	S	T1	UV1WX1Z1Z2
LM 8	720	1109	820	303	787	1037	52	62	555	315	495	784	1058	160	99	131,5	600	150	578	444	520	640	28	690	40	59
LM 11	720	1109	925	303	787	1037	52	62	555	315	495	784	1058	160	99	131,5	600	150	578	444	520	640	28	795	40	59
LM 14	880	1285	905	460	963	1210	56	56	754	661	594	1041	1200	272	105	232	600	150	735	510	528	800	80	679	40	99
LM 18	880	1285	1010	460	963	1210	56	56	754	661	594	1041	1200	272	105	232	600	150	735	510	528	800	80	784	40	99
LM 22	880	1285	1100	460	963	1210	56	56	754	661	594	1041	1200	272	105	232	600	150	735	510	528	800	80	874	40	99

HIGH SPIN WASHERS
LM SERIES 26-32 KG
IMESA

This range of **imesa 26 and 32 kg** high spin washers, equipped with the innovative IM11 computer touchscreen makes programming, use and maintenance extremely simple and intuitive.

MODELS
1. LM-26 KG
2. LM-32 KG



TOUCH SCREEN
- INNOVATIVE IM11 7" tilted capacitive touchscreen.
- Library with 15 stored wash cycles.

FEATURES
- High level of recyclability of materials and components.
- Compatible with central payment systems for self-service use (connection kit needed).
- 5 alternative heating methods: hot water, electric, Electric + steam, direct steam, indirect steam
- Balanced water fill: hot and cold water are mixed during the filling phase to save energy.

G FACTOR
- 350-400 G factor.

CONNECTIVITY
- Total control of wash cycles by wi-fi via the IM11, IMConnect portal and Laundry for You App.

DRUM SIZE
- Drum and outer drum made of stainless steel AISI 304 AS STANDARD. Front, top and side panels in INOX 304 ON REQUEST.

OTHERS
- High efficiency in centrifuge Poly-v transmission belts, spin control system with reduction of dynamic imbalance.
- Reduced vibrations and silence.
- New front washer gasket and door lock support pins.
- High level of recyclability of materials and components.
- Free of floor fastening

FEATURES



The innovative IM11 computer touchscreen makes programming, use and maintenance extremely simple and intuitive.



New oversized door, the largest in its category, for easier loading and unloading.



Efficiency, sturdiness and ease of use for high level washing results.

LM SERIES 26-32 KG
DATA SHEET

TECHNICAL DATA	LM 26	LM 32
Capacity1:9- 1:10	28 - 26 Kg(62 - 57lb)	36 - 32 Kg(79 - 70lb)
Drum diameter Ø	855 mm (33.6 inch.)	855 mm (33.6 inch.)
Drum depth	444 mm (17.5 inch.)	557 mm (22 inch.)
Drum volume	254 lt	320 lt
Load diameter Ø	380 mm (15 inch.)	380 mm (15 inch.)
Spin speed	915 r.p.m	915 r.p.m
G Factor	400	400
Air sound intensity	65 dB (A)	65 dB (A)
Heating leakage	5%	5%
Dynamic load (frequency)	30 kN (12.25 Hz)	35 kN (15.25 Hz)
Cold water consumption*	172 l (6.07 ft³)	211 l (7.45 ft³)
Hot water consumption*	50 l (1.7 ft³)	62 l (2.2 ft³)
Water consumption*	222 l (7.8 ft³)	273 l (9.7 ft³)
Drain flow	160 lt/min (5.6 ft³/min)	160 lt/min (5.6 ft³/min)
Machine dimension WxDxH (100 mm = 3.93 inch.)	1100x970x1440 mm	1100x1084x1440 mm
Net weight	663 Kg (1461.6 lb)	683 Kg (1505.7 lb)
Packing dimension WxDxH (100 mm = 3.93 inch.)	1120x1130x1540 mm	1120x1130x1540 mm
Gross weight	677 Kg (1492.5 lb)	697 Kg (1539.6 lb)
Gross weight wooden cage - wooden case	-	-
Packaging volume	1,95 mc (68.8 ft³)	1,95 mc (68.8 ft³)
STD. packed machines in to 20' container	10 pz.	10 pz.
STD. packed machines in to 40' container	20 pz.	20 pz.
DATA BY TYPE OF HEATING		
ElectricalHeating(electricmachines)	28 kW	29 kW
Consumption* (electric machines)	2,4 kWh	3,2 kWh
Electric absorption (electric machines)	24 kW | (optional:18/30 kW)	24 kW | (optional:18/30 kW)
3ph400V-480V(+N) / 3ph230V / 1ph230V (electric machines)	40 / 69 A	42 / 71 A
Steam heating consumption* (steam machines)	2 Kg (4.4 lb)	4 Kg (8.8 lb)
Electric consumption* (hot-water machines)	1,5 kWh	2,3 kWh
Electric absorption (hot-water-steam machines)	4 kW	5 kW
3ph400V-480V(+N) / 3ph230V / 1ph230V (hot-water-steam machines)	6 / 10 A	8 / 14 A

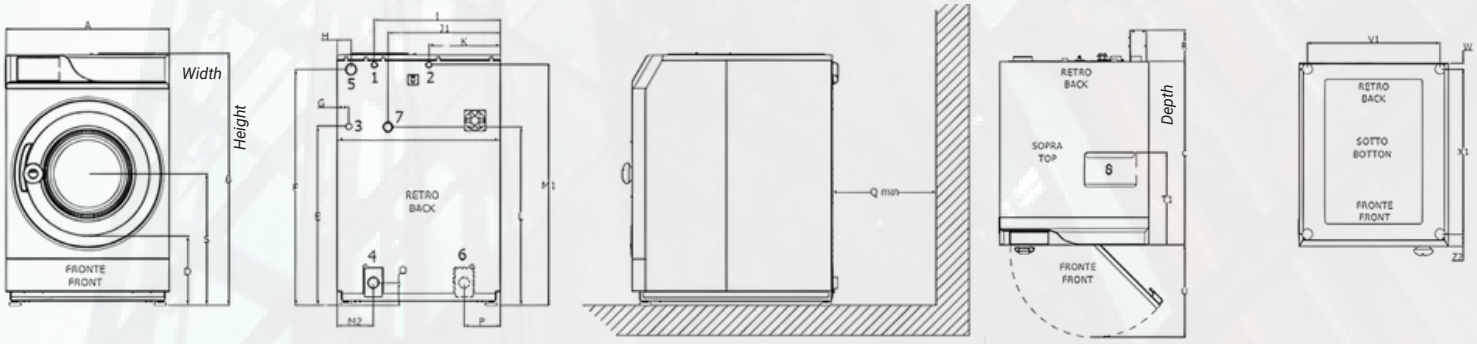

mm	A	B	C	D	E1E2	F	G1G2HJ1J2J3	K	L	M1O	PQ min	R	ST1UV1WX1Y	β
LM 26	1100	1420	970	580	1100	320	1355 90 110 90 945 835 725	600	1170	1340	120 816 600	155	850 250 600 1010 312 586 70	155°
LM 32	1100	1420	1084	580	1100	320	1355 90 110 90 945 835 725	600	1170	1340	120 816 600	155	850 250 600 1010 312 700 70	155°

HIGH SPIN WASHERS
LM SERIES 40-55-70-85 KG
IMESA

This range of **imesa LM 40-55-70 and 85 kg** high spin washers, equipped with the innovative IM11 computer touchscreen makes programming, use and maintenance extremely simple and intuitive.

MODELS
1. LM-40 KG
2. LM-55 KG
3. LM-70 KG
4. LM 85 KG



TOUCH SCREEN
- INNOVATIVE IM11 7" tilted capacitive touchscreen.
- Library with 15 stored wash cycles.

FEATURES
- High level of recyclability of materials and components.
- Compatible with central payment systems for self-service use (connection kit needed).
- 5 alternative heating methods: hot water, electric, Electric + steam, direct steam, indirect steam
- Balanced water fill: hot and cold water are mixed during the filling phase to save energy.

G FACTOR
- 350-400 G factor.

CONNECTIVITY
- Total control of wash cycles by wi-fi via the IM11, IMConnect portal and Laundry for You App.

DRUM SIZE
- Drum and outer drum made of stainless steel AISI 304 AS STANDARD. Front, top and side panels in INOX 304 ON REQUEST.

OTHERS
- High efficiency in centrifuge Poly-v transmission belts, spin control system with reduction of dynamic imbalance.
- Reduced vibrations and silence.
- New front washer gasket and door lock support pins.
- High level of recyclability of materials and components.
- Free of floor fastening

FEATURES



The innovative IM11 computer touchscreen makes programming, use and maintenance extremely simple and intuitive.

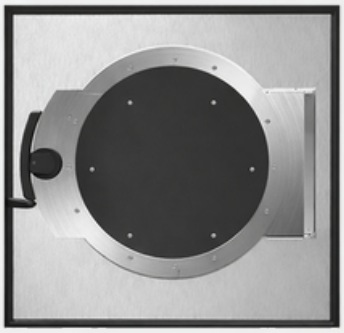

New oversized door, the largest in its category, for easier loading and unloading.



Efficiency, sturdiness and ease of use for high level washing results.

LM SERIES 40-55-70-85 KG
DATA SHEET

TECHNICAL DATA	LM 40	LM 55	LM 70	LM 85
Capacity1:9- 1:10	44 - 40 Kg(97 - 88lb)	63 - 55Kg (139 - 121 lb)	78 - 70Kg (172 - 154 lb)	94 - 85Kg (207 - 187 lb)
Drum diameter Ø	880 mm (34.6 inch.)	1080 mm (42.5 inch.)	1200 mm (47 inch.)	1200 mm (47 inch.)
Drum depth	650 mm (25.6 inch.)	603 mm (23.4 inch.)	618 mm (24.3 inch.)	750 mm (29.5 inch.)
Drum volume	400 lt	562 lt	700 lt	850 lt
Load diameter Ø	530 mm (20.8 inch.)	530 mm (20.8 inch.)	530 mm (20.8 inch.)	530 mm (20.8 inch.)
Spin speed	802 r.p.m	802 r.p.m	723 r.p.m	723 r.p.m
G Factor	351	351	351	351
Air sound intensity	70 dB (A)	70 dB (A)	72 dB (A)	72 dB (A)
Heating leakage	5%	5%	5%	5%
Dynamic load (frequency)	17228 N (13.4 Hz)	17228 N (13.4 Hz)	22393 N (12 Hz)	17226 N (12 Hz)
Cold water consumption*	440 l (15.5 ft³)	605 l (21.3 ft³)	770 l (27.2 ft³)	935 l (33 ft³)
Hot water consumption*	80 l (2.8 ft³)	110 l (3.8 ft³)	140 l (4.9 ft³)	170 l (6 ft³)
Water consumption*	520 l (18.3 ft³)	715 l (25.2 ft³)	910 l (32.1 ft³)	1105 l (39 ft³)
Drain flow	200 lt/min (7 ft³/min)	200 lt/min (7 ft³/min)	200 lt/min (7 ft³/min)	200 lt/min (7 ft³/min)
Machine dimension WxDxH (100 mm = 3.93 inch.)	1540x1452x1770 mm	1540x1667x1770 mm	1700x1479x2020 mm	1700x1611x2020 mm
Net weight	1452 Kg (3201 lb)	1621 Kg (3573 lb)	1811 Kg (3992 lb)	1852 Kg (4082.5 lb)
Packing dimension WxDxH (100 mm = 3.93 inch.)	1540x1700x1910 mm	1540x1700x1910 mm	1700x1540x2200 mm	1750x1700x2200 mm
Gross weight	1510 Kg (3229 lb)	1680 Kg (3703 lb)	1870 Kg (4122 lb)	1912 Kg (4215 lb)
Packaging volume	5 mc (176.5 ft³)	5 mc (176.5 ft³)	5,8 mc (205 ft³)	6,5 mc (229.5 ft³)
STD. packed machines in to 20' container	3 pz.	3 pz.	3 pz.	3 pz.
STD. packed machines in to 40' container	7 pz.	7 pz.	7 pz.	7 pz.
DATA BY TYPE OF HEATING				
ElectricalHeating(electricmachines)	6x4=24 kW	6x5=30 kW	6x5=30 kW	6x5=30 kW
Consumption* (electric machines)	4 kWh	6,5 kWh	8 kWh	10 kWh
Electric absorption (electric machines)	29 kW	36 kW	38 kW	40 kW
3ph400V-480V(+N) / 3ph230V / 1ph230V (electric machines)	49 / 85 A	60 / 103 A	61 / 106 A	65 / 106 A
Steam heating consumption* (steam machines)	1 Kg (2.2 lb)	1,4 Kg (3 lb)	1,8 Kg (3,9 lb)	2,2 Kg (4,8 lb)
Electric consumption* (hot-water machines)	2,7 kWh	3,3 kWh	4 kWh	5 kWh
Electric absorption (hot-water-steam machines)	4 kW	9 kW	9 kW	9 kW
3ph400V-480V(+N) / 3ph230V / 1ph230V (hot-water-steam machines)	12 / 20 A	16 / 28 A	16 / 28 A	16 / 28 A

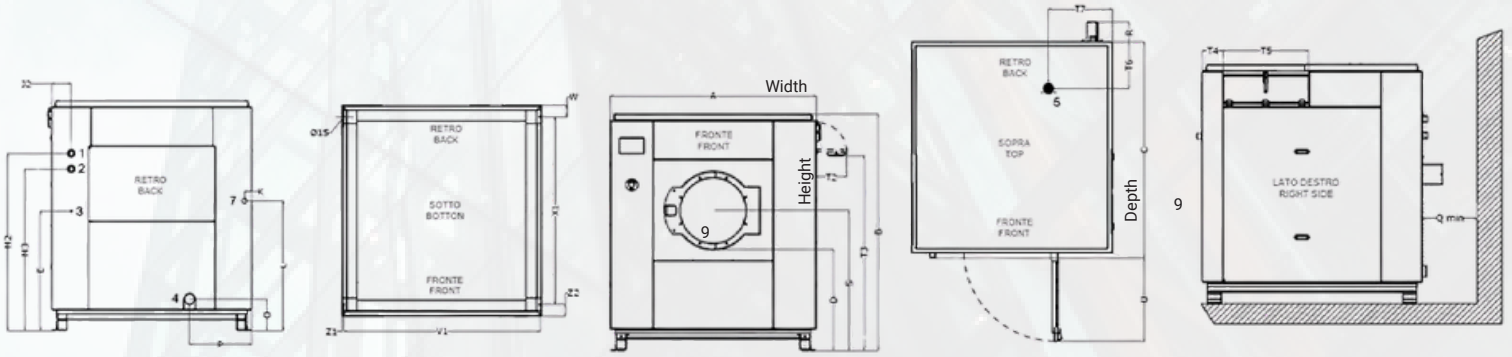

mm	A	B	C	D	E	K	L	O	P	Q	S	T2	T3	T4	U	W	X1	Z1	Z2
LM 40	1540	1770	1452	757	920	58	1000	240	480	600	1046	230	1458	155	623	90	1230	15	90
LM 55	1540	1770	1667	757	920	58	1000	240	480	600	1046	230	1458	155	623	90	1445	15	90
LM 70	1700	2020	1479	890	975	57	1249	240	580	600	1179	233	1710	150	623	90	1255	15	90
LM 85	1700	2020	1611	890	975	57	1249	240	580	600	1179	233	1710	150	623	90	1387	15	90

HIGH SPIN WASHERS
LM SERIES 100-125 KG
IMESA

The imesa **LM 100** and **LM 125 Kg** are the ideal solution for industrial and artisan laundries and large **hotels** and hospitals.

MODELS
1. LM-100 KG
2. LM-125 KG



TOUCH SCREEN
- INNOVATIVE IM11 7" tilted capacitive touchscreen.
- Library with 15 stored wash cycles.

FEATURES
- Automatic detergent dosing systems from 1 to 6 peristaltic pumps.
- kit 2 or 3 wire mesh water inlet pipes 1 1/2 inch.
- Hard water inlet valve.
- Low or hard pressure steam valve.
- Second drain valve for water recovery circuit.
- Linen weighing system with load cells.
- 1 way linen downloading system or 2 way line downloading/loading system.

G FACTOR
- 350-400 G factor.

CONNECTIVITY
- Total control of wash cycles by wi-fi via the IM11, IMConnect portal and Laundry for You App.

DRUM SIZE
- Drum and outer drum made of stainless steel AISI 304 AS STANDARD. Front, top and side panels in INOX 304 ON REQUEST.
- Stainless steel AISI 304 spider

OTHERS
- Easy linen download system Kit connection upt to 11 peristaltic detergent pumps High level of recyclability of materials and components.
- Safety fastening with anchor bolts (not included) Compressed air requested.

FEATURES



The innovative IM11 computer touchscreen makes programming, use and maintenance extremely simple and intuitive.

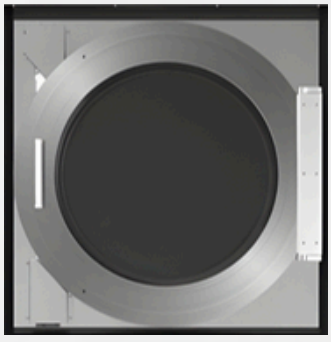

New oversized door, the largest in its category, for easier loading and unloading.



Efficiency, sturdiness and ease of use for high level washing results.

LM SERIES 100-125 KG
DATA SHEET

TECHNICAL DATA	LM 100	LM 125
Capacity1:9- 1:10	111 - 100 Kg(245 - 221lb)	139 - 125 Kg (306 - 276 lb)
Drum diameter Ø	1270 mm (50 inch.)	1270 mm (50 inch.)
Drum depth	878 mm (34.5 inch.)	1074 mm (42 inch.)
Drum volume	1000 lt	1250 lt
Load diameter Ø	710 mm (28 inch.)	710 mm (28 inch.)
Spin speed	700 r.p.m	700 r.p.m.
G Factor	347	347
Air sound intensity	69 dB (A)	69 dB (A)
Heating leakage	7%	7%
Dynamic load (frequency)	32466 N (541 Hz)	30758 N (512,6 Hz)
Cold water consumption*	1100 l (38.8 ft³)	1375 l (48.5 ft³)
Hot water consumption*	. 210 l (7.4 ft³)	263 l (9.3 ft³)
Water consumption*	1310 l (46 ft³)	1638 l (58 ft³)
Drain flow	200 lt/min (7 ft³/min)	400 lt/min (14 ft³/min)
Consumo aria compressa-ci	10 l (0.35 ft³)	10 l (0.35 ft³)
Machine dimension WxDxH (100 mm = 3.93 inch.)	1700x1644x2105 mm	1700x1834x2105 mm
Net weight	1990 Kg (4387 lb)	2074 Kg (4572 lb)
Packing dimension WxDxH (100 mm = 3.93 inch.)	1740x1740x2260 mm	1800x1930x2260mm
Gross weight	2050 Kg (4519 lb)	2141 Kg (4720 lb)
Packaging volume	6,8 mc (240 ft³)	7,8 mc (275.5 ft³)
STD. packed machines in to 20' container	3 pz.	3 pz.
STD. packed machines in to 40' container	6 pz.	6 pz.
DATA BY TYPE OF HEATING		
ElectricalHeating(electricmachines)	30 kW	30 kW
Consumption* (electric machines)	5,68 kWh	6,25 kWh
Electric absorption (electric machines)	42 kW	42 kW
3ph400V-480V(+N) / 3ph230V / 1ph230V (electric machines)	45 / 77 A	45 / 77 A
Steam heating consumption* (steam machines)	1 Kg (2.2 lb)	1,4 Kg (3 lb)
Electric consumption* (hot-water machines)	5,68 kWh	6,25 kWh
Electric absorption (hot-water-steam machines)	12 kW	12 kW
3ph400V-480V(+N) / 3ph230V / 1ph230V (hot-water-steam machines)	19 / 32 A	19 / 32 A

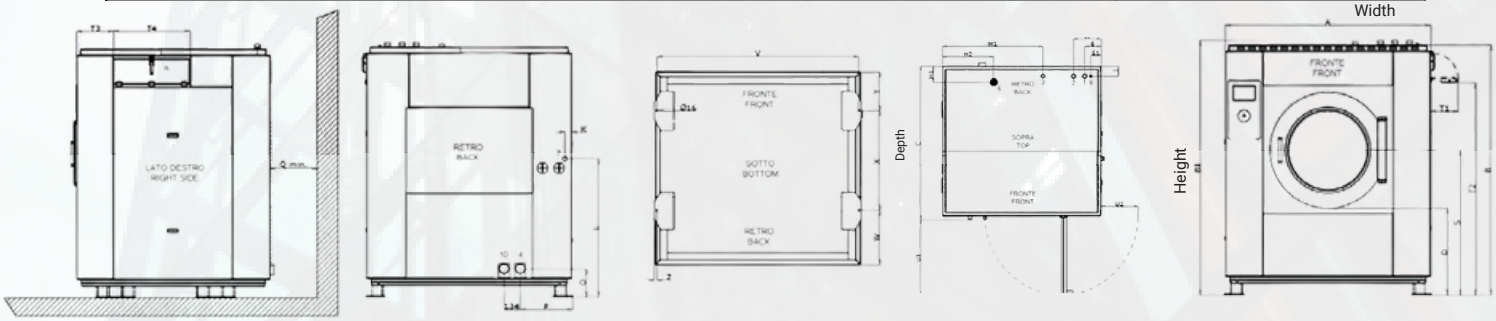

100 mm = 3.93 inch. - factor conversion 1 / 25,4

mm	A	B	B1	C	D	E	E1	H1	H2	J	K	L	M	M1	O	P	Q min	S	T1	T2	T3	T4	U1	U2	V	W	X	Y	Z
LM 100	1700	2065	2105	1644	717	173.5	108.5	169	549.5	105	57	1142.5	293.5	1076.5	235	434	600	1197	233	1752.5	300	630	810	400	1674	449	830.5	320	20
LM 125	1700	2065	2105	1834	717	173.5	108.5	169	549.5	105	57	1142.5	293.5	1076.5	235	434	600	1197	233	1752.5	300	630	810	400	1674	449	1020.5	320	20

LOW SPIN WASHERS
RC SERIES 11-14-18-23 KG
IMESA

Imesa RC series 11-14-18-23 KG industrial washing machines do not require springs or shock absorbers. Fixed to the ground by fixing devices. Ideal for use on board small and medium sized ships, ferries and freighters.

MODELS
1. RC- 11 KG
2. RC- 14 KG
3. RC- 18 KG
4. RC- 23 KG



TOUCH SCREEN
- IM.11 Computer touch screen 7"
- Library with 15 stored wash cycles.

FEATURES
- kit connection up to 11 peristaltic detergent pumps.
- Automatic detergent dosing systems from 1 to 6 peristaltic pumps.
- Drain pump kit (applicable to 3ph 400/415V+N machines).
- kit 2 or 3 wire mesh water inlet pipes 3/4 inch.
- Front and side panels in stainless steel AISI 304.
- Fischer kit for ground anchoring.
- Door opening left.

CONNECTIVITY
- Total control of wash cycles by wi-fi via the IM11, IMConnect portal and Laundry for You App.

DRUM SIZE
- Stainless steel AISI 304
- Top, drum and outer drum

OTHERS
- RC14: Heating group 3x3000W std
- RC18: Heating group 3x4000W std
- RC23: Heating group 3x5000W std
- Needs to be fixed to the floor (fischer not supplied)
- High level of recyclability of materials and components.

FEATURES



The innovative IM11 computer touchscreen makes programming, use and maintenance extremely simple and intuitive.

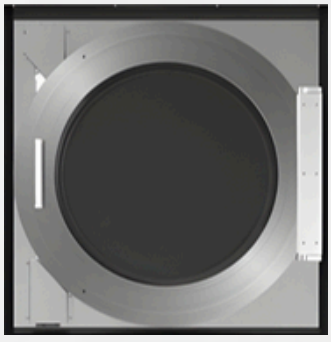

New oversized door, the largest in its category, for easier loading and unloading.



Efficiency, sturdiness and ease of use for high level washing results.

RC SERIES 11-14-18-23 KG
DATA SHEET

TECHNICAL DATA	RC 11	RC 14	RC 18	RC 23
Capacity1:9- 1:10	11,7 - 10,6 Kg (23.3 - 25.9 lb)	15,6 - 14 Kg(34.4 - 30.8 lb)	20 - 18Kg (44.1-39.6 lb)	24 - 23 Kg(52.9-50.6 lb)
Drum diameter Ø	535 mm (21 inch.)	700 mm (27.5 inch.)	700 mm (27.5 inch.)	700 mm (27.5 inch.)
Drum depth	470 mm (18.5 inch.)	365 mm (14.4 inch.)	470 mm (18.5 inch.)	560 mm (22 inch.)
Drum volume	105 lt	140 lt	181 lt	216 lt
Load diameter Ø	380 mm (15 inch.)	380 mm (15 inch.)	380 mm (15 inch.)	380 mm (15 inch.)
Spin speed	535 r.p.m	568 r.p.m.	568 r.p.m	568 r.p.m.
G Factor	85	126	126	126
Air sound intensity	65 dB (A)	65 dB (A)	65 dB (A)	65 dB (A)
Heating leakage	0.05	0.05	0.05	0.05
Dynamic load (frequency)	2519 N (8.9 Hz)	4210 N (9.5 Hz)	3963 N (9,5 Hz)	3467 N (9,5 Hz)
Cold water consumption*	68 l (1.7 ft³)	92 l (3.2 ft³)	119 l (4.2 ft³)	152 l (5.3 ft³)
Hot water consumption*	20 l (0.5 ft³)	27 l (0.9 ft³)	34 l (1.2 ft³)	44 l (1.5 ft³)
Water consumption*	88 l (2.2 ft³)	119 l (4.2 ft³)	153 l (5.4 ft³)	196 l (6.9 ft³)
Drain flow	160 lt/min (5.6 ft³/min)	160 lt/min (5.6 ft³/min)	160 lt/min (5.6 ft³/min)	160 lt/min (5.6 ft³/min)
Machine dimension WxDxH (100 mm = 3.93 inch.)	720x933x1087 mm	880x954x1312 mm	880x1010x1285 mm	880x1100x1285 mm
Net weight	220,8 Kg (486.7 lb)	295,2 Kg (650.8 lb)	304,5 Kg (671.3 lb)	315,6 Kg (695.7 lb)
Packing dimension WxDxH (100 mm = 3.93 inch.)	760x1045x1210 mm	920x1150x1400 mm	920x1150x1400 mm	920x1150x1400 mm
Gross weight	231,5 Kg (510.3 lb)	310,4 Kg (684.3 lb)	319,7 Kg (704.8 lb)	330,9 Kg (729.5 lb)
Gross weight wooden cage - wooden case	244 Kg (537.9 lb)	353 - 373 Kg (778 - 822 lb)	366-386 Kg (807-851 lb)	373-393 Kg (822-866 lb)
Packaging volume	0,96 mc (33.9 ft³)	1.5 mc (52.9 ft³)	1.5 mc (52.9 ft³)	1.5 mc (52.9 ft³)
STD. packed machines in to 20' container	32 pz. stackable	12 pz.	12 pz.	12 pz.
STD. packed machines in to 40' container	68 pz. stackable	26 pz.	26 pz.	26 pz.
DATA BY TYPE OF HEATING				
ElectricalHeating(electricmachines)	9 kW	9 kW	12 kW	15 kW
Consumption* (electric machines)	1,5 kWh	1,5 kWh	1,5 kWh	1,6 kWh
Electric absorption (electric machines)	10,5 kW	11 kW	14 kW	17 kW
3ph400V-480V(+N) / 3ph230V / 1ph230V (electric machines)	16 / 25 / 42 A	17 / 26 / 43 A	22 / 38 / 66 A	27 / 47 / 80 A
Steam heating consumption* (steam machines)	0,2 Kg (0.4 lb)	0,3 Kg (0.6 lb)	0,4 Kg (0.9 lb)	0,6 Kg (1.3 lb)
Electric consumption* (hot-water machines)	0,8 kWh	0,8 kWh	0,8 kWh	0,9 kWh
Electric absorption (hot-water-steam machines)	1,5 kW	1,5 kW	1,5 kW	1,5 kW
3ph400V-480V(+N) / 3ph230V / 1ph230V (hot-water-steam machines	- / - / 3 A	- / - / 4 A	- / - / 4 A	- / - / 4 A

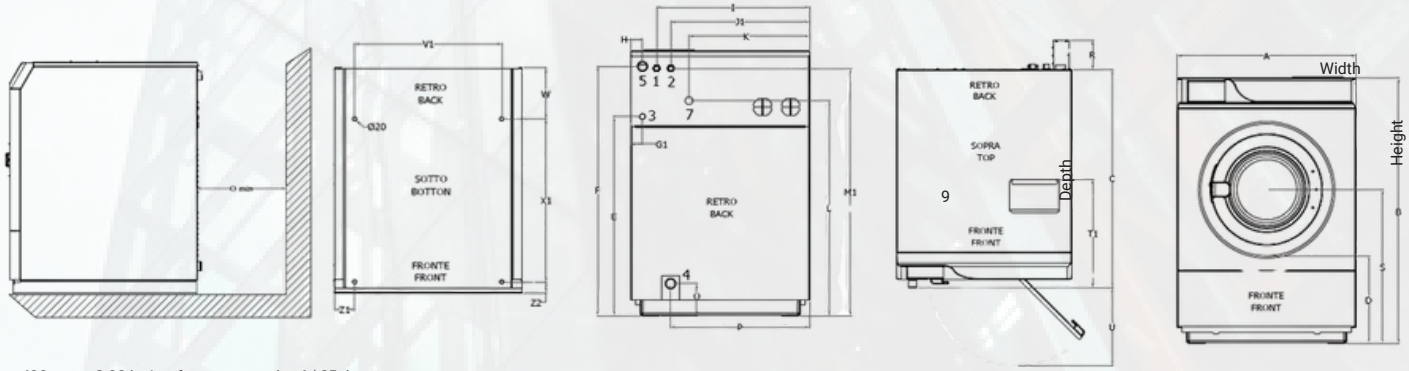

100 mm = 3.93 inch. - factor conversion 1 / 25,4

mm	A	B	C	D	E	F	G	H	I	J1	K	L	M1	O	P	Q min	R	S	T1	UV1WX1Z1Z2		Z1	Z2
RC 11	720	1085	925	279	763	1013	52	62	555	315	495	760	1034	160	75	131,5	600	150	553.5	444	520	610	191	613.5	55	75
RC 14	880	1312	954	480	982	1230	56	56	754	684	594	1060	1220	160	685	600	150	756	545	465	690	240	570	95	51	
RC 18	880	1312	1010	480	982	1230	56	56	754	684	594	1060	1220	160	685	600	150	756	545	465	690	240	675	95	51	
RC 23	880	1312	1100	480	982	1230	56	56	754	684	594	1060	1220	160	685	600	150	756	545	465	690	240	765	95	51	

LOW SPIN WASHERS
RC SERIES 30-40 KG
IMESA

The imesa **RC 30 and RC 40 Kg** are the ideal solution for hard mounted industrial washing machine designed to last.

MODELS
1. RC- 30 KG
2. RC- 40 KG



TOUCH SCREEN
- IM.11 Computer touch screen 7"
- Library with 15 stored wash cycles.

FEATURES
- kit connection up to 11 peristaltic detergent pumps.
- Automatic detergent dosing systems from 1 to 6 peristaltic pumps.
- Kit 2 or 3 wire mesh water inlet pipes 3/4 inch.
- Front and side panels in stainless steel AISI 304 (only RC 30).
- Door opening left (only RC 30).
- Hard water inlet valve.
- Low or hard pressure steam valve.

CONNECTIVITY
- Total control of wash cycles by wi-fi via the IM11, IMConnect portal and Laundry for You App.

DRUM SIZE
- RC30: Stainless steel AISI 304 top, drum and outer drum.
- RC40: Stainless steel AISI 304 top, front, side panels, drum and outer drum.

OTHERS
- Needs to be fixed to the floor (fischer not supplied)
- High level of recyclability of materials and components.

FEATURES



The innovative IM11 computer touchscreen makes programming, use and maintenance extremely simple and intuitive.

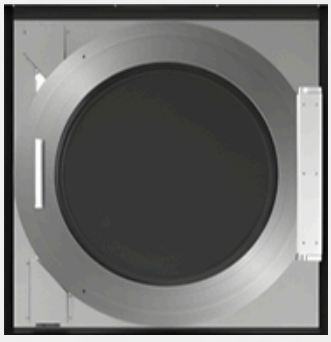

New oversized door, the largest in its category, for easier loading and unloading.



Efficiency, sturdiness and ease of use for high level washing results.

RC SERIES 30-40 KG
DATA SHEET

TECHNICAL DATA	RC 30	RC 40
Capacity1:9- 1:10	35 - 32 Kg(77 - 66lb)	44 - 40 Kg(97 - 88lb)
Drum diameter Ø	880 mm (34.6 inch.)	880 mm (34.6 inch.)
Drum depth	523 mm (20.5 inch.)	645 mm (25.4 inch.)
Drum volume	320 lt	395 lt
Load diameter Ø	400 mm (15.7 inch.)	530 mm (20.8 inch.)
Spin speed	452 r.p.m	452 r.p.m
G Factor	100	100
Air sound intensity	65 dB (A)	65 dB (A)
Heating leakage	5%	5%
Dynamic load (frequency)	6916 N (7.5 Hz)	6916 N (7.5 Hz)
Cold water consumption*	225 l (7.9 ft³)	440 l (15.5 ft³)
Hot water consumption*	60 l (2.1 ft³)	80 l (2.8 ft³)
Water consumption*	285 l (10 ft³)	520 l (18.4 ft³)
Drain flow	200 lt/min (7 ft³/min)	200 lt/min (7 ft³/min)
Machine dimension WxDxH (100 mm = 3.93 inch.)	1098x946x1433 mm	1098x1076x1400 mm
Net weight	478,7 Kg (1055.3 lb)	512 Kg (1128.7 lb)
Packing dimension WxDxH (100 mm = 3.93 inch.)	1150x1110x1720 mm	1300x1300x1760 mm
Gross weight	531,3 Kg (1171.3 lb)	570 Kg (1256.6 lb)
Gross weight wooden cage - wooden case	-	680 Kg (1499.1 lb)
Packaging volume	2,15 mc (75.9 ft³)	2,97 mc (105 ft³)
STD. packed machines in to 20' container	10 pz.	4 pz.
STD. packed machines in to 40' container	20 pz.	9 pz.
DATA BY TYPE OF HEATING		
ElectricalHeating(electricmachines)	24 kW	24 kW
Consumption* (electric machines)	4 kWh	4 kWh
Electric absorption (electric machines)	27 kW	29 kW
3ph400V-480V(+N) / 3ph230V / 1ph230V (electric machines)	46 / 79 / - A	49 / 85 / - A
Steam heating consumption* (steam machines)	0,8 Kg (1.7 lb)	1 Kg (2.2 lb)
Electric consumption* (hot-water machines)	2,5 kWh	2,7 kWh
Electric absorption (hot-water-steam machines)	4 kW	4 kW
3ph400V-480V(+N) / 3ph230V / 1ph230V (hot-water-steam machines)	11 / 19 / - A	12 / 20 / - A

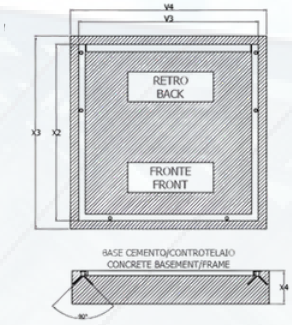

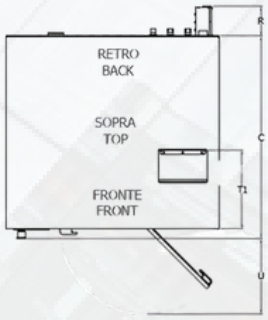

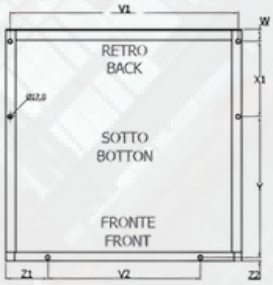

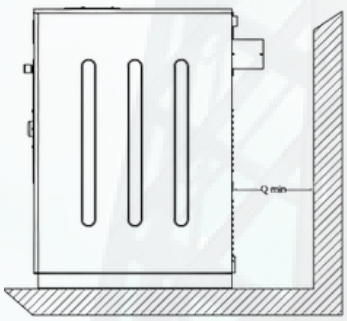

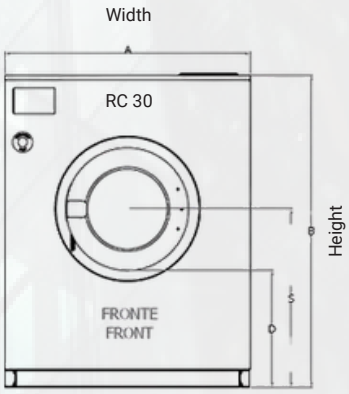

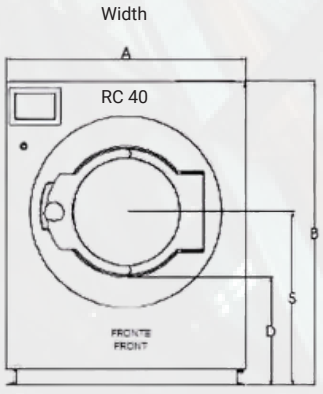

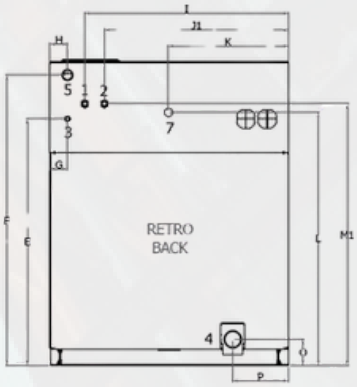

100 mm = 3.93 inch. - factor conversion 1 / 25,4

mm	A	B	C	D	E	F	G	H	I	J1	K	L	M10	PQ$_{min}$	R	S	T1	U	V1	V2	V3	V4	W	X1	X2	X3	X4	Y	Z1	Z2
RC 30	1098	1433	946	529	1140	1338	80	80	938	848	552	1165	1204	120	255	600	150	800	361	465	1060	800	1110	1310	205	517	972	1172	200	233	148	18
RC 40	1098	1400	1076	496	1137	1339	80	80	938	848	552	1167	1206	120	256	600	-	799	404	-	1060	710	1110	1310	19	350	1096	1296	200	-	-	-

LOW SPIN WASHERS
RC SERIES 55-70-85 KG
IMESA

The imesa **RC 55-70 and RC 85 Kg** are the ideal solution for hard mounted industrial washing machine designed to last.

MODELS
1. RC- 55 KG
2. RC- 70 KG
3. RC- 85 KG



TOUCH SCREEN
- IM.11 Computer touch screen 7"
- Library with 15 stored wash cycles.

FEATURES
- Kit connection up to 11 peristaltic detergent pumps.
- Automatic detergent dosing systems from 1 to 6 peristaltic pumps.
- Kit 2 or 3 wire mesh water inlet pipes 1 1/2 inch.
- Kit counter frame for ground fixing.
- Hard water inlet valve.
- Low or hard pressure steam valve.
- Second drain valve for water recovery circuit.
- Easy linen download system.

CONNECTIVITY
- Total control of wash cycles by wi-fi via the IM11, IMConnect portal and Laundry for You App.

DRUM SIZE
- Stainless steel AISI 304 top, front and side panels, drum and outer drum

OTHERS
- Needs to be fixed to the floor (conterframe not included).
- High level of recyclability of materials and components.
- RC 70-85: S-WEIGHING SYSTEM linen weighing system

FEATURES



The innovative IM11 computer touchscreen makes programming, use and maintenance extremely simple and intuitive.

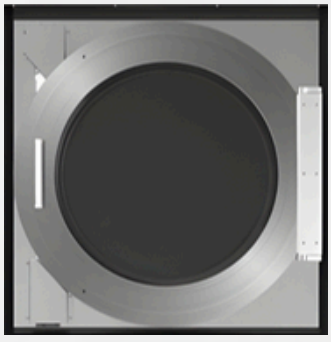

New oversized door, the largest in its category, for easier loading and unloading.



Efficiency, sturdiness and ease of use for high level washing results.

RC SERIES 55-70-85 KG
DATA SHEET

TECHNICAL DATA	RC 55	RC 70	RC 85
Capacity1:9- 1:10	61,3 - 55,2 Kg(135-122 lb)	77,6 - 70 Kg(171-154lb)	94,2 - 84,8 Kg (208-187 lb)
Drum diameter Ø	1080 mm (42.5 inch.)	1200 mm (47.2 inch.)	1200 mm (47.2 inch.)
Drum depth	603 mm (23.7 inch.)	618 mm (24.3 inch.)	750 mm (29.5 inch.)
Drum volume	550 lt	700 lt	850 lt
Load diameter Ø	530 mm (20.8 inch.)	530 mm (20.8 inch.)	530 mm (20.8 inch.)
Spin speed	408 r.p.m	360 r.p.m	360 r.p.m
G Factor	100	86	86
Air sound intensity	70 dB (A)	70 dB (A)	70 dB (A)
Heating leakage	5%	5%	5%
Dynamic load (frequency)	9876 N (6.8 Hz)	8527 N (6 Hz)	8357 N (6 Hz)
Cold water consumption*	605 l (21.4 ft³)	770 l (27.2 ft³)	935 l (33 ft³)
Hot water consumption*	110 l (3.9 ft³)	140 l (4.9 ft³)	170 l (6 ft³)
Water consumption*	715 l (25.2 ft³)	910 l (32.1 ft³)	1105 l (39 ft³)
Drain flow	200 lt/min (7 ft³/min)	200 lt/min (7 ft³/min)	200 lt/min (7 ft³/min)
Machine dimension WxDxH (100 mm = 3.93 inch.)	1430x1344x1870 mm	1560x1395x1870 mm	1560x1525x1870 mm
Net weight	968 Kg (2133.8 lb)	1052 Kg (2319.2 lb)	1184 Kg (2610.2 lb)
Packing dimension WxDxH (100 mm = 3.93 inch.)	1540x1500x2020 mm	1700x1540x2020 mm	1750x1700x2020 mm
Gross weight	1051 Kg (2317 lb)	1150 Kg (2535.3 lb)	1276 Kg (2813.1 lb)
Gross weight wooden cage - wooden case	-	-	-
Packaging volume	4.6 mc (162.5 ft³)	5.3 mc (187.2 ft³)	5.7 mc (201.3 ft³)
STD. packed machines in to 20' container	3 pz.	3 pz.	3 pz.
STD. packed machines in to 40' container	8 pz.	7 pz.	7 pz.
DATA BY TYPE OF HEATING			
ElectricalHeating(electricmachines)	30 kW	30 kW	30 kW
Consumption* (electric machines)	5 kWh	9 kWh	9 kWh
Electric absorption (electric machines)	35 kW	38 kW	40 kW
3ph400V-480V(+N) / 3ph230V / 1ph230V (electric machines)	56 / 96 / - A	61 / 106 / - A	65 / 113 / - A
Steam heating consumption* (steam machines)	1,4 Kg (3 lb)	1,8 Kg (3.9 lb)	2,2 Kg (4.8 lb)
Electric consumption* (hot-water machines)	3,5 kWh	6,5 kWh	6,7 kWh
Electric absorption (hot-water-steam machines)	5 kW	9 kW	9 kW
3ph400V-480V(+N) / 3ph230V / 1ph230V (hot-water-steam machines)	14 / 24 / - A	18 / 31 / - A	22 / 37 / - A

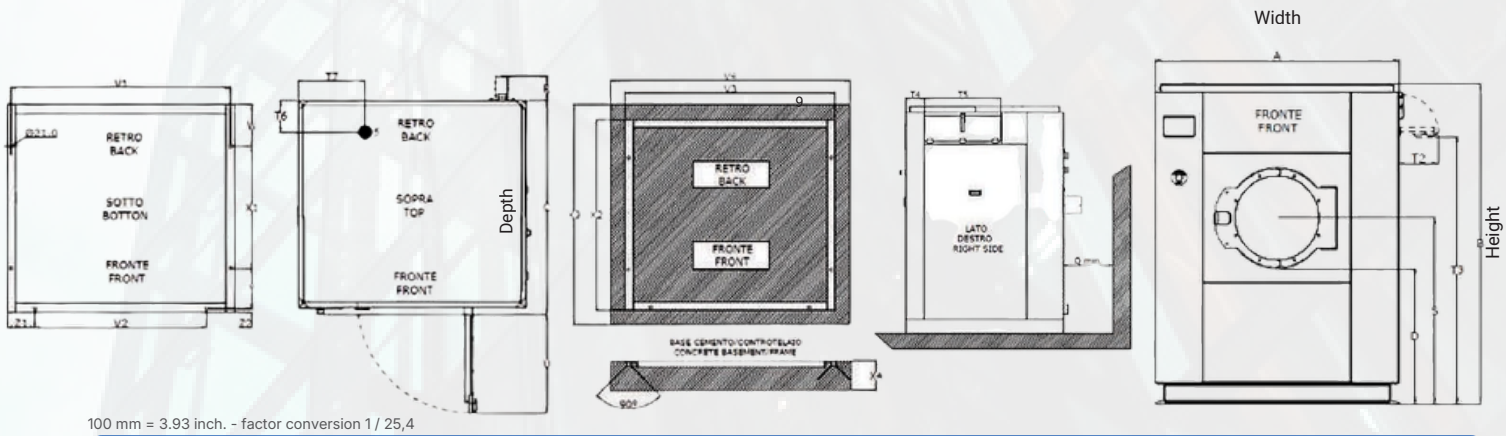

100 mm = 3.93 inch. - factor conversion 1 / 25,4

mm	A	B	C	D	E	J2	K	L	M2	M3	O	P	Q_{min}	R	S	T2	T3	T4	T5	T6	T7	U	V1	V2	V3	V4	W	X1	X2	X3	X4	Y	Z1	Z2
RC 55	1430	1870	1344	788	1020	150	57	1148	1465	1345	200	425	600	150	1084	230	1560	155	630	200	421	623	1380	1080	1430	1630	260	765	1300	1500	200	255	175	20
RC 70	1560	1870	1395	830	1020	150	57	1148	1465	1345	200	490	600	150	1118	230	1560	155	630	513	310	623	1520	1200	1560	1760	260	765	1350	1550	200	305	180	20
RC 85	1560	1870	1525	830	1020	150	57	1148	1465	1345	200	490	600	150	1118	230	1560	155	630	579	310	623	1520	1200	1560	1760	260	897	1482	1582	200	305	180	20

HYGIENE BARRIER WASHERS
D2W SERIES 18-23 KG
IMESA

D2W 18 and 23 kg hygiene barrier industrial washing machine are ideal for small and medium-sized structures.

- Efficiency, sturdiness and ease of use for high level washing results.
- The hygiene barrier washers are suitable as hospital washing machine.

MODELS
1. D2W- 18 KG
2. D2W- 23KG



TOUCH SCREEN
- IM.11 Computer touch screen 7"
- Library with 15 stored wash cycles.

G FACTOR
- 300-350 G factor.

FEATURES
- kit connection upt to 11 peristaltic detergent pumps.
- Automatic detergent dosing systems from 1 to 6 peristaltic pumps.
- Kit 2 or 3 wire mesh water inlet pipes 3/4 inch.
- Hard water inlet valve.
- Low or hard pressure steam valve.
- Second drain valve for water recovery circuit

CONNECTIVITY
- Total control of wash cycles by wi-fi via the IM11, IMConnect portal and Laundry for You App.

DRUM SIZE
INOX AISI 304
- Stainless steel AISI 304 top, front and side panels, drum and outer drum

OTHERS
- Two separate doors on the infected side and the clean side.
- High level of recyclability of materials and components.
- Free of floor fastening

FEATURES



- The innovative IM11 computer touchscreen makes programming, use and maintenance extremely simple and intuitive.

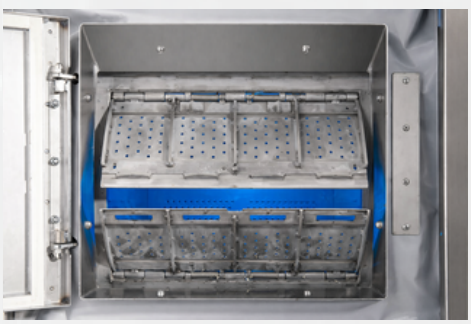

- Electronic control of door opening to avoid opening errors and all types of contamination.



- 3 alternative heating methods: electric, direct or indirect steam.

D2W SERIES 18-23 KG
DATA SHEET

TECHNICAL DATA	D2W 18	D2W 23
Capacity1:9- 1:10	20- 18Kg (44 - 39,6lb)	24 - 23 Kg(53 - 50,6lb)
Drum diameter Ø	700 mm (27.5 inch.)	700 mm (27.5 inch.)
Drum depth	470 mm (18.5 inch.)	560 mm (22.0 inch.)
Drum volume	180 lt	215 lt
Load diameter Ø	279 x 366 mm	279 x 366 mm
Spin speed	877 r.p.m	877 r.p.m
G Factor	300	300
Air sound intensity	65 dB (A)	65 dB (A)
Heating leakage	5%	5%
Dynamic load (frequency)	10332 N (15 Hz)	8856 N (15 Hz)
Cold water consumption*	119 l (4.2 ft³)	152 l (5.3 ft³)
Hot water consumption*	34 l (1.2 ft³)	44 l (1.5 ft³)
Water consumption*	153 l (5.4 ft³)	196 l (6.9 ft³)
Drain flow	160 lt/min (5.6 ft³/min)	160 lt/min (5.6 ft³/min)
Machine dimension WxDxH (100 mm = 3.93 inch.)	967x980x1570 mm	967x1070x1570 mm
Net weight	528,1 Kg (1164 lb)	540,3 Kg (1191.1 lb)
Packing dimension WxDxH (100 mm = 3.93 inch.)	1150x1100x1700 mm	1150x1100x1700 mm
Gross weight	561,9 Kg (1238.7 lb)	574 Kg (1265.4 lb)
Gross weight wooden cage - wooden case	-	-
Packaging volume	2,13 mc (75.2 ft³)	2,13 mc (75.2 ft³)
STD. packed machines in to 20' container	10 pz.	10 pz.
STD. packed machines in to 40' container	20 pz.	20 pz.
DATA BY TYPE OF HEATING		
ElectricalHeating(electricmachines)	12 kW	15 kW
Consumption* (electric machines)	1,4 kWh	1,8 kWh
Electric absorption (electric machines)	14,5 kW	18 kW
3ph400V-480V(+N) / 3ph230V / 1ph230V (electric machines)	22 / 38 / - A	27 / 47 / - A
Steam heating consumption* (steam machines)	1,2 Kg	1,8 Kg
Electric consumption* (hot-water machines)	0,8 kWh	0,9 kWh
Electric absorption (hot-water-steam machines)	2,5 kW	3 kW
3ph400V-480V(+N) / 3ph230V / 1ph230V (hot-water-steam machines)	5 / 8 / - A	5 / 9 / - A

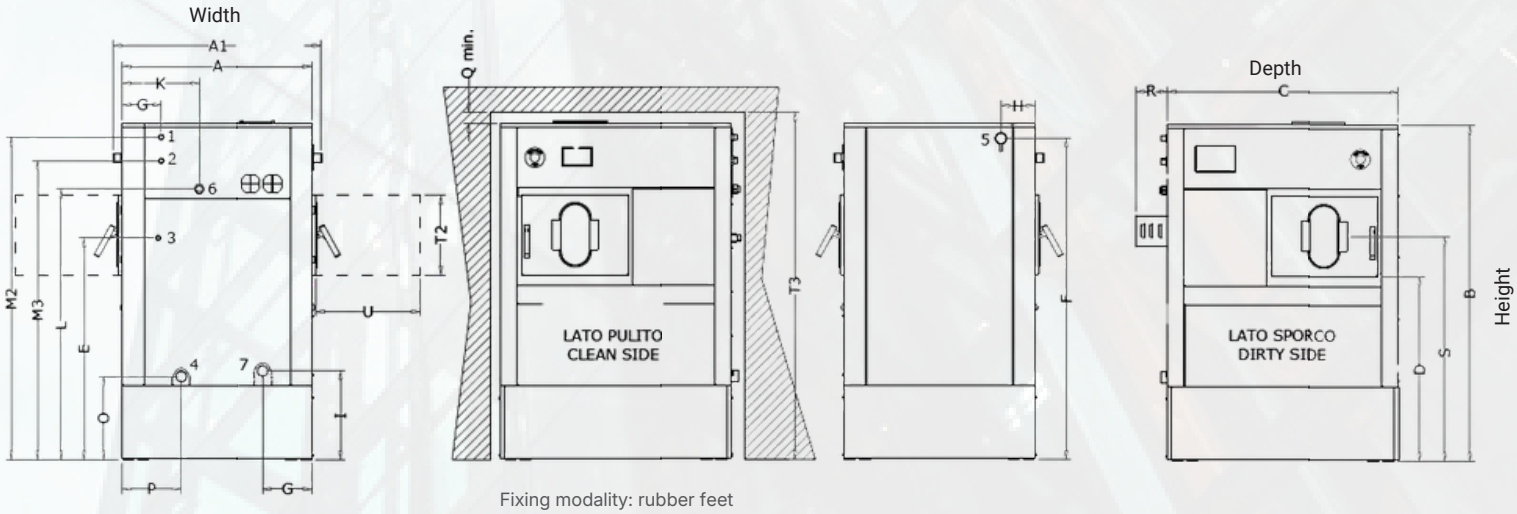

Fixing modality: rubber feet

100 mm = 3.93 inch. - factor conversion 1 / 25,4

mm	A	A1	B	C	D	E	F	G	H	I	J2	K	L	M1	M2	M3	O	P	Q_{min}	Q	R	S	T1	T2	T3	U	V1	W	X1	Z1	Z2
D2W 18	880	967	1570	980	857	1026	1488	230	57	411	180	355	1253	1170	1494	1384	386	272	50	95	150	1042	339	367	1600	483	558	81	820	161	100
D2W 23	880	967	1570	1070	857	1026	1488	230	157	411	180	355	1253	1170	1494	1384	386	272	50	95	150	1042	339	367	1600	483	558	81	910	161	100

HYGIENE BARRIER WASHERS
D2W SERIES 30-55 KG
IMESA

D2W 30 and 55 kg hygiene barrier industrial washing machine are ideal for structures coping with large numbers of people. Efficiency, sturdiness and ease of use for high level washing results.

MODELS
1. D2W- 30 KG
2. D2W- 55 KG



TOUCH SCREEN
- IM.11 Computer touch screen 7"
- Library with 15 stored wash cycles.

G FACTOR
- 350 G factor.

FEATURES
- kit connection upt to 11 peristaltic detergent pumps.
- Automatic detergent dosing systems from 1 to 6 peristaltic pumps.
- Kit 2 or 3 wire mesh water inlet pipes 3/4 inch.
- Hard water inlet valve.
- Low or hard pressure steam valve.
- Second drain valve for water recovery circuit

CONNECTIVITY
- Total control of wash cycles by wi-fi via the IM11, IMConnect portal and Laundry for You App.

DRUM SIZE
- Stainless steel AISI 304 top, front and side panels, drum and outer drum.
- Stainless steel AISI 304 spider

OTHERS
- Two separate doors on the infected side and the clean side.
- High level of recyclability of materials and components.
- Safety fastening with anchor bolts.

FEATURES



- The innovative IM11 computer touchscreen makes programming, use and maintenance extremely simple and intuitive.



- Electronic control of door opening to avoid opening errors and all types of contamination.



- 3 alternative heating methods: electric, direct or indirect steam.

D2W SERIES 30-55 KG
DATA SHEET

TECHNICAL DATA	D2W 30	D2W 55
Capacity1:9- 1:10	33 - 30 Kg(72,8 - 66.1lb)	63 - 55 Kg(139 - 121lb)
Drum diameter Ø	880 mm (34.6 inch.)	977 mm (38.4 inch.)
Drum depth	523 mm (20.6 inch.)	753 mm (29.6 inch.)
Drum volume	318 lt	565 lt
Load diameter Ø	380 x 400 mm (14.9 x 15.7 inch.)	400 x 560 mm (15.7 x 22 inch.)
Spin speed	840 r.p.m	802 r.p.m
G Factor	347	350
Air sound intensity	65 dB (A)	70 dB (A)
Heating leakage	6%	5%
Dynamic load (frequency)	20474 N (13,4 Hz)	17228 N (13,4 Hz)
Cold water consumption*	225 l (7.9 ft³)	605 l (21,3 ft³)
Hot water consumption*	60 l (2.1 ft³)	110 l (3.8 ft³)
Water consumption*	285 l (10 ft³)	715 l (25,2 ft³)
Drain flow	200 lt/min (7 ft³/min)	200 lt/min (7 ft³/min)
Machine dimension WxDxH (100 mm = 3.93 inch.)	1258x1373x1968 mm	1627x1625x1908 mm
Net weight	1047,1 Kg (2308.4 lb)	1825,9 Kg (4025.4 lb)
Packing dimension WxDxH (100 mm = 3.93 inch.)	1380x1300x2100 mm	1660x1700x2120 mm
Gross weight	1084 Kg (2389.8 lb)	1884 Kg (4153.5 lb)
Gross weight wooden cage - wooden case	-	-
Packaging volume	3,76 mc (131.7 ft³)	5,55 mc (196 ft³)
STD. packed machines in to 20' container	4 pz.	3 pz.
STD. packed machines in to 40' container	9 pz.	7 pz.
DATA BY TYPE OF HEATING		
ElectricalHeating(electricmachines)	24 kW	30 kW
Consumption* (electric machines)	3,8 kWh	6,2 kWh
Electric absorption (electric machines)	29 kW	38 kW
3ph400V-480V(+N) / 3ph230V / 1ph230V (electric machines)	46 / 79 / - A	60 / 103 / - A
Steam heating consumption* (steam machines)	3 KG	6 KG
Electric consumption* (hot-water machines)	2,5 kWh	6,2 kWh
Electric absorption (hot-water-steam machines)	6 kW	9 kW
3ph400V-480V(+N) / 3ph230V / 1ph230V (hot-water-steam machines)	11 / 19 / - A	16 / 28 / - A

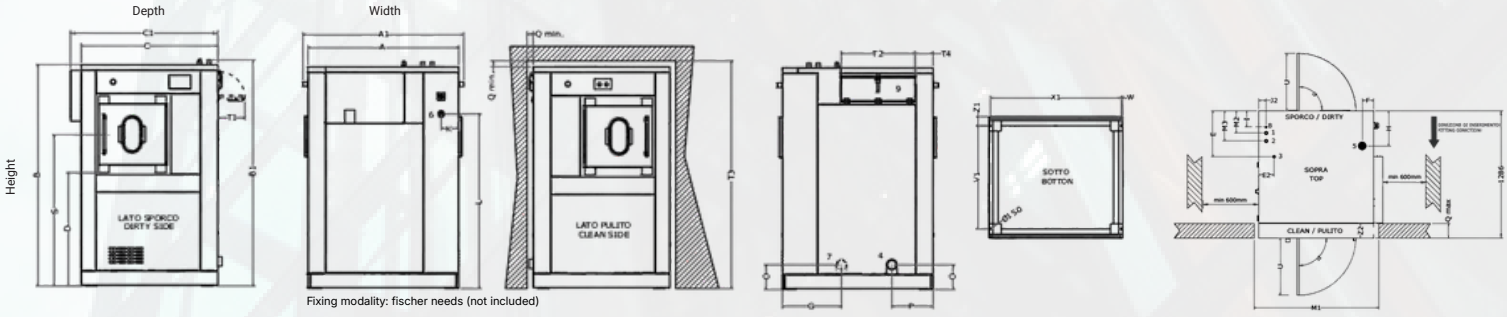

Fixing modality: fischer needs (not included)

100 mm = 3.93 inch. - factor conversion 1 / 25,4

mm	A	A1	B	B1	C	C1	D	E	E2	F	G	H	K	L	M1	M2	M3	Q_{max}	P	Q_{min}	Q	S	T1	T2	T3	T4	U	V1	W	X1	Z1	Z2	α max
D2W 30	1286	1373	1887	1968	1166	1258	965	467	156	117	504	356	150	1485	1266	226	306	210	353	50	145	1290	233	630	1940	155	155	990	13	1260	88	150	115°
D2W 55	1540	1627	1867	1908	1625		868	655	155	1198	480	1005	150	1270	1725	294	414	240	480	50	195	1184	233	630	1920	205	500	1445	13	1510	88	200	115°

KINGSTAR SERIES
STANDARD WASHER
CLM

Kingstar Standard Washer equipped with the world's leading washing technology, Italian customized inner drum processing machine, using a large number of advanced manufacturing processes and imported components.

MODELS
1. SHS-2012
2. SHS-2015
3. SHS-2020
4. SHS-2125



TOUCH SCREEN
- 10-inch full color touch screen, simple and easy operation, automatic adding detergent, and one-click to easily complete the entire washing process.

HIGH EFFICIENCY
- Using 2-way water mouths design, large size drainage valve, etc., improve efficiency and reduce costs.

INVERTER
- Computer boards, inverters, and main motors adopt 485 communication connections.
- The communication efficiency is faster and more stable.

SHOCK ABSORPTION DESIGN
- KingStar washer extractor can work on any floor without having to do the foundation.
- Suspended spring shock absorption structure design, German brand damping device, ultra -low vibration.

CUSTOMIZED INNER DRUM
- The inner drum and the outer cover are made by moudles and Italian customized inner drum process machine.
- The welding-free technology makes the inner drum higher strength and the quality is more stable in the mass production.

OTHERS
- The main transmission uses a 3 bearing design, which is high in strength, which can ensure 10 years maintenance free.
- The main motor is customized by a domestic listed company.The maximum speed is 980 rpm.

FEATURES



- Inner drum mesh is designed with 3mm bore diameter , effectively improve the washing rate of clothes, and do not hang zipper, buttons, etc.



- Electric components are all famous brands.The inverter is customized by Mitsubishi.

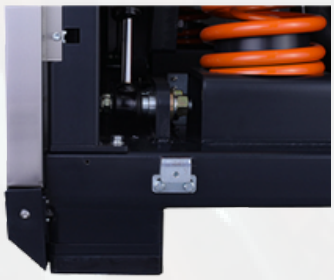

- The main transmission uses a 3 bearing design, which is high in strength, which can ensure 10 years maintenance free.

STANDARD WASHERS
DATA SHEET

Specification Model	SHS-2012	SHS-2015	SHS-2020	SHS-2025
Operating Voltage （V/P/Hz）	380/3/50	380/3/50	380/3/50	380/3/50
Washing Capacity （Kg）	5～12	5～15	8～20	8～25
Drum Volume （L）	120	150	200	250
Washing/Spinning Speed （rpm）	30～850	30～850	30～850	30～850
Transmission Power(kW)	1.5	1.5	2.2	3
Electrical Heating Power(kW)	12	18	18	18
Noise(db)	≤70	≤70	≤70	≤70
Extraction Factor （G）	300	300	300	300
Automatic Dosing Ports (ways)	9	9	9	9
Steam Pressure(MPa)	0.2～0.4	0.2～0.4	0.2～0.4	0.2～0.4
Inlet Water Pressure （Mpa）	0.2～0.4	0.2～0.4	0.2～0.4	0.2～0.4
Inlet Pipe Diameter （mm）	DN20	DN20	DN20	DN20
Hot Water Pipe Diameter （mm）	DN20	DN20	DN20	DN20
Drain Pipe Diameter （mm）	Φ76	Φ76	Φ76	Φ76
Inner Drum Diameter ×Depth （mm）	Φ650×372	Φ650×465	Φ750×457	Φ750×566
Overall Dimension (mm)	890×885×1480	890×1077×1480	980×1050×1570	980×1160×1570
Total Weight(Kg)	400	420	480	500



Front side

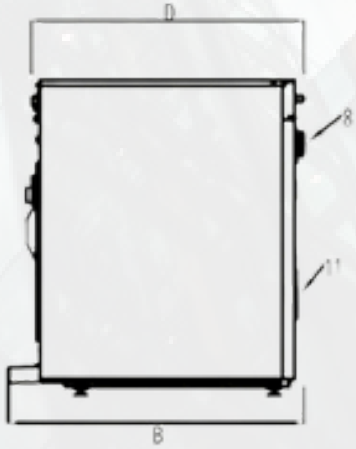

Right side

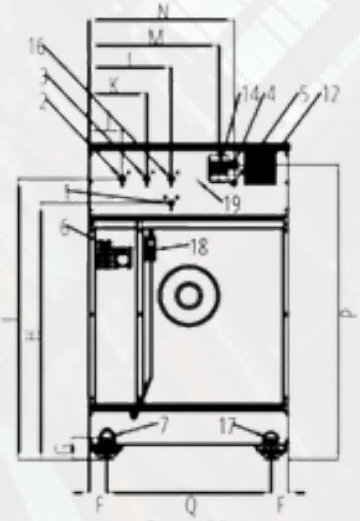

Rear side

1. Steam Inlet
2. Cold Water
3. Hot Water
4. Electrical Connection
5. Grounding Connection
6. Liquid Detergent Connection and Breather
7. Drain
8. Detergent Dispenser
9. Control Panel
10. Emergency Stop Button
11. Door Handle
12. Electric Cabinet Cooling Fan Filter
13. USB Port
14. Power Switch
15. Status Light
16. 3rd Water Inlet
17. Water Recycle
18. Sampling Hose
19. Serial Plate

Unit	A (width)	B (depth)	C (height)	D	E	F	G	H	I	J	K	L	M	N	O	P	Q
mm	982	1355	1547	1241	598	88	109	1253	1373	162	282	402	634	709	37	1443	1000
in	38.7	53.3	60.9	48.9	23.5	3.46	4.3	49.3	54.1	6.4	11.1	15.8	25	27.9	1.5	56.8	31.5

KINGSTAR SERIES
PROFESSIONAL WASHER
CLM

KingStar **Professional Washers** are developed and designed by CLM, which is a leading brand in laundry industry.

MODELS
1. SHS-2012P
2. SHS-2015P
3. SHS-2020P
4. SHS-2025P



TOUCH SCREEN
- 10-inch full LCD touch screen, simple and easy to operate, automatically add chemical, one -click to easily complete the entire washing process.

HIGH EFFICIENCY
- You can set up to 70 sets different washing programs, and the self-determined program can achieve communication transmission between different devices

FEATURES
- Intelligent washing process Extreme care for delicate garments. Safe washing.
- 10 rpm minimum rotation speed.
- Intelligent Washing System

OPTIMIZED DESIGN
- The Kingstar series wet cleaning machine , compared with ordinary washing machines on the market, has made 22 optimal designs in terms of intelligence, laundry process, mechanical falling force, surface friction, liquid washing materials, drainage and other aspects.

CUSTOMIZED INNER DRUM
- Italian customized inner drum special processing machine, the mesh is designed with diamond surface, the surface is uneven, which increases the surface friction of the clothes and effectively improves the cleaning rate of clothes.

OTHERS
- The optional automatic detergent distribution system can be selected for 5-9 cups, which can open the signal interface of any brand distribution device to achieve accurate putting detergent, reduce waste, save artificially, and have more stable washing quality.

FEATURES



- Inner drum mesh is designed with 3mm bore diameter , effectively improve the washing rate of clothes, and do not hang zipper, buttons, etc.



- Electric components are all famous brands.The inverter is customized by Mitsubishi.

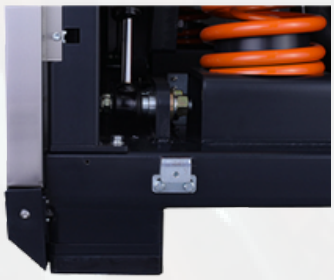

- The main transmission uses a 3 bearing design, which is high in strength, which can ensure 10 years maintenance free.

PROFESSIONAL WASHERS
DATA SHEET

Specification Model	SHS-2012P	SHS-2015P	SHS-2020P	SHS-2025P
Washing Capacity （Kg）	380/3/50	380/3/50	380/3/50	380/3/50
Capacity （kg）	5～12	5～15	8～20	8～25
Drum Volume （L）	120	150	200	250
Washing/Spinning Speed （rpm）	15～980	15～980	15～980	15～980
Transmission Power(kw)	1.5	1.5	1.5	3
Electrical Heating Power(kw)	12	12	18	18
Noise(db)	≤70	≤70	≤70	≤70
Extraction Factor （G）	400	400	400	400
Automatic Dosing Ports (ways)	9	9	9	9
Steam Pressure(MPa)	0.2～0.4	0.2～0.4	0.2～0.4	0.2～0.4
Inlet Water Pressure （Mpa）	0.2～0.4	0.2～0.4	0.2～0.4	0.2～0.4
Steam Pipi Diameter （mm）	DN15	DN15	DN15	DN15
Inlet Pipe Diameter （mm）	DN20	DN20	DN20	DN20
Hot Water Pipe Diameter （mm）	DN20	DN20	DN20	DN20
Drain Pipe Diameter （mm）	Φ76	Φ76	Φ76	Φ76
Inner Drum Diameter ×Depth	Φ650×372	Φ650×465	Φ750×4157	Φ750×566
Overall Dimension (mm)	890×885×1480	890×1077×1480	980×1050×1570	980×1160×1570
Total Weight(Kg)	400	420	480	500

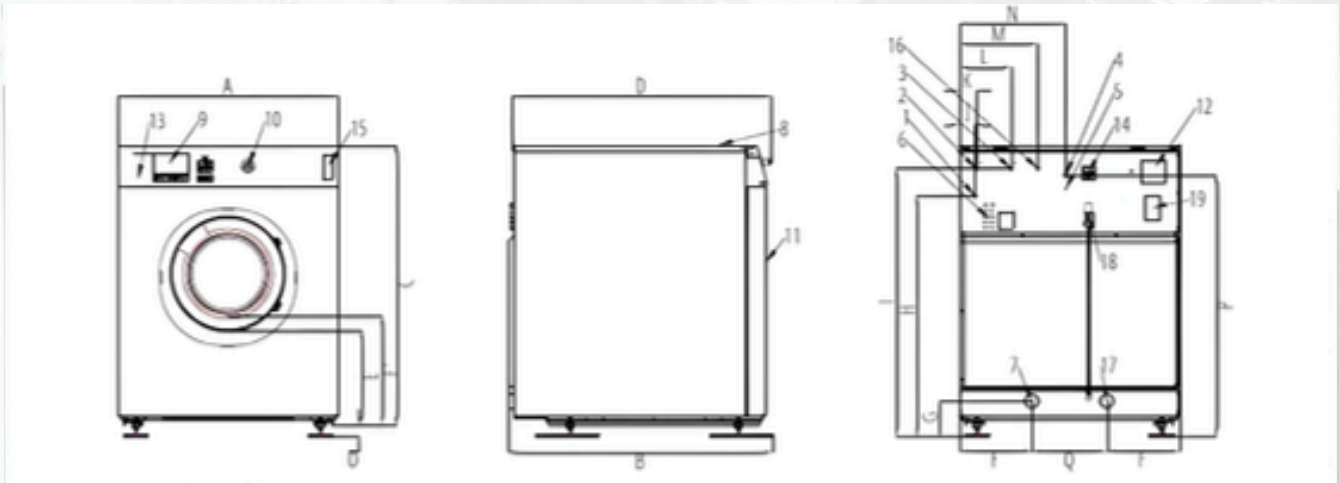

Front side

Right side

Rear side

1. Steam Inlet
2. Hot Water
3. Cold Water
4. Electrical Connection
5. Grounding Connection
6. Liquid Detergent Connection and Breather
7. Drain
8. Detergent Dispenser
9. Control Panel
10. Emergency Stop Button
11. Door Handle
12. Electric Cabinet Cooling Fan Filter
13. USB Port
14. Power Switch
15. Status Light
16. 3rd Water Inlet
17. Water Recycle
18. Sampling Hose
19. Serial Plate

Unit	A (width)	B (depth)	C (height)	D	E	E'	F	G	H	I	J	K	L	M	N	O	P	Q
mm	977	1175	1413	1095	470	543	287	189	1241	1369	75	95	255	400	500	83	1339	400
in	38.46	46.3	55.63	43.1	18.5	21.4	11.3	7.44	48.9	53.9	2.95	3.74	10.04	15.75	19.7	3.27	52.7	15.75

KINGSTAR SERIES
INDUSTRAIL FORWARD TILTING WASHER
CLM

KingStar **Professional Washers** are developed and designed by CLM, which is a leading brand in laundry industry.

MODELS
1. SHS-2100T
2. SHS-2120T



TOUCH SCREEN
- 10-inch full LCD touch screen, simple and easy to operate, automatically add chemical, one -click to easily complete the entire washing process.

HIGH EFFICIENCY
- KingStar tilting washer extractor belt polly is made of the high-grade aluminum alloy material and is a whole integrated die-casting structure, which effectively guarantees the assembly accuracy of the main axis.

FEATURES
- The strength design of the KingStar washer extractor, the design of the transmission system, and the configuration of the high-quality inverter all revolved around the super extraction capacity of 400G.

OPTIMIZED DESIGN
- Equipped with the "intelligent weighing system" , according to the actual weight of the linen, add water and detergent according to the proportion, and the corresponding steam can save the cost of water, electricity, steam and detergent, but also ensure the stability of washing quality.

CUSTOMIZED INNER DRUM
- KingStar tilting washer extractor use forward tilting 15 degrees design, the discharging become more easier and smoothly, effectively reduce the labor intensity.

OTHERS
- Electric components are imported brands. The inverter is Mitsubishi brand in Japan and all contactors are Schneider from France, all wires, plugins, bearing, etc.

FEATURES



- The design of large-diameter water inlet, automatic feeding system and optional double drainage can help you shorten the washing time.



- There are 30 sets of washing programs to choose from, and 5 sets of common automatic washing programs are available.



- KingStar washer extractor backward tilted at 3.5 degrees of the outer drum.

INDUSTRAIL FORWARD TILTING WASHERS
DATA SHEET

Specification Model	SHS-2100T	SHS-2120T
Operating Voltage （V/P/Hz）	380/3/50	380/3/50
Washing Capacity （Kg）	100	120
Drum Volume （L）	1000	1200
Spinning Speed （rpm）	745	745
Transmission Power(kW)	11	11
Steam Pressure(MPa)	0.4-0.6	0.4-0.6
Inlet Water Pressure （Mpa)	0.2-0.4	0.2-0.4
Noise(db)	≤70	≤70
Dehydration Factor （G)	400	400
Steam Pipi Diameter （mm)	DN25	DN25
Inlet Pipe Diameter （mm)	DN50	DN50
Hot Water Pipe Diameter （mm)	DN50	DN50
Drain Pipe Diameter （mm)	DN100	DN100
Inner Drum Diameter （mm)	Φ1310	Φ1310
Inner Drum Depth （mm)	750	950
Front Tilting Angle （°)	15	15
Total Weight(Kg)	3690	3830
Overall Dimensions L×W×H(mm)	1860×1870×2470	1860×2090×2470

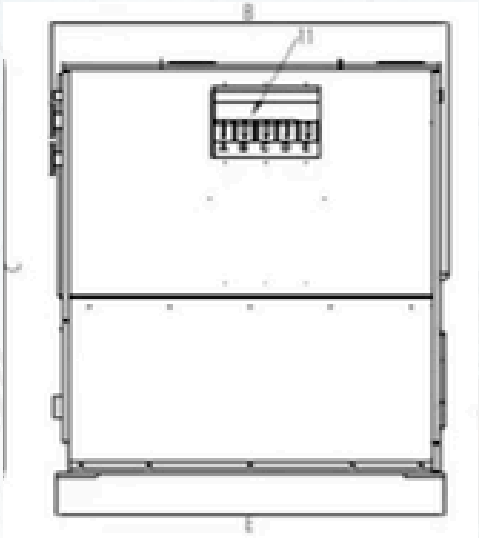

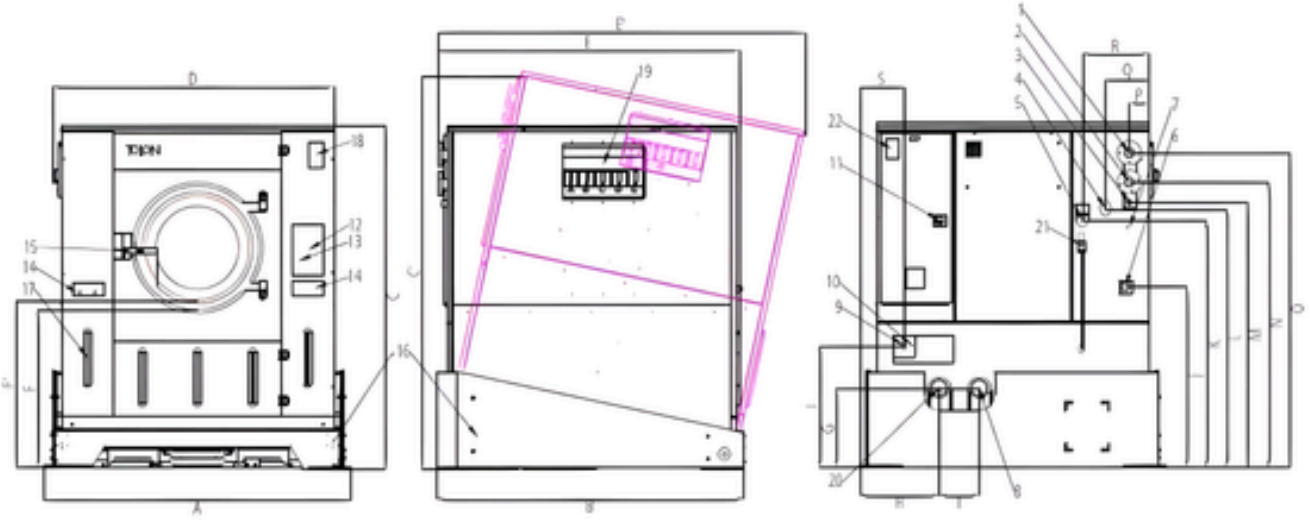

Front side　　Right side　　Rear side

1. Cold Water
2. Hot Water
3. Water Inlet (for detergent)
4. Liquid Detergent
5. Breather
6. Steam Inlet
7. Air Preparation
8. Drain
9. Electrical Connection
10. Grounding Connection
11. Power Switch
12. Control Panel
13. USB Port
14. Emergency Stop Button
15. Door Handle
16. Tilting System
17. Bumper
18. Status Light
19. Detergent Dispenser
20. Water Recycle
21. Sampling Hose
22. Serial Plate

Unit	A (width)	B (depth)	C (height)	C'	D	E	E'	F	F'	G	H	I	J	K	L	M	N	O	P	Q	R	S	T
mm	1990	1995	2234	2542	1828	1955	2381	1025	1089	517	517	791	1177	1602	1683	1723	1853	2043	129	284	436	290	262
in	78.3	78.5	88	100.1	72	77	93.7	40.4	42.9	20.4	20.4	31.1	46.3	63.1	66.3	67.8	73	80.4	5.1	11.2	17.2	11.4	10.2

KINGSTAR SERIES
SMART HIGH-SPEED WASHER
CLM

The **Kingstar high-speed washer** is a fully automatic, heavy-duty washing machine designed for commercial and industrial laundry environments — such as laundromats, hotels, hospitals, and large laundry facilities.

MODELS
1. SHS-2030
2. SHS-2040
3. SHS-2060
4. SHS-2100
5. SHS-2120



TOUCH SCREEN
- 10-inch full LCD touch screen, simple and easy to operate, automatically add chemical, one -click to easily complete the entire washing process.

HIGH EFFICIENCY
- The design of large-diameter water inlet, automatic feeding system and optional double drainage can help you shorten the washing time, improve the efficiency and reduce the cost.

FEATURES
- There are 30 sets of washing programs to choose , and 5 sets of common automatic washing programs are available.

OPTIMIZED DESIGN
- The design of oversized stainless steel clothing door and electronic door control device not only improves the safety in use, but also meets the needs of loading more linen.

CUSTOMIZED INNER DRUM
- The inner and outer cylinders of the washer extractor and the parts in contact with water are all made of 304 stainless steel to ensure that the washer extractor will never rust, and there will be no washing quality accidents caused by the rusting of the washer extractor

OTHERS
- The washer extractor adopts high-quality aluminum alloy integrated bearing bracket to ensure the assembly accuracy of the shaft, as well as the effects of shock resistance, rust resistance and corrosion resistance, and is durable.

FEATURES



- Inner drum mesh is designed with 3mm bore diameter , effectively improve the washing rate of clothes, and do not hang zipper, buttons, etc.



- Electric components are all famous brands.The inverter is customized by Mitsubishi.

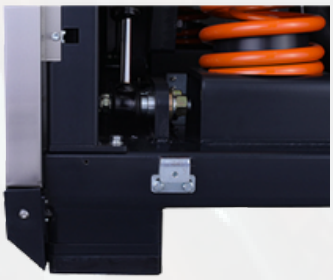

- The main transmission uses a 3 bearing design, which is high in strength, which can ensure 10 years maintenance free.

SMART HIGH-SPEED WASHER
DATA SHEET

Specification Model	SHS-2030	SHS-2040	SHS-2060	SHS-2100	SHS-2120
Operating Voltage (V/P/Hz)	380/3/50	380/3/50	380/3/50	380/3/50	380/3/50
Maximum Washing Capacity (kg)	30	40	60	100	120
Drum Volume (L)	300	400	600	1000	1200
Maximum Spinning Speed (rpm)	870	833	760	745	745
Transmission Power(kW)	4	5.5	7.5	11	11
Steam Pressure(MPa)	0.4-0.6	0.4-0.6	0.4-0.6	0.4-0.6	0.4-0.6
Inlet Water Pressure (Mpa)	0.2-0.4	0.2-0.4	0.2-0.4	0.2-0.4	0.2-0.4
Noise (db)	≤70	≤70	≤70	≤70	≤70
Dehydration Factor (G)	350	350	350	400	400
Steam Pipi Diameter (mm)	DN25	DN25	DN25	DN25	DN25
Inlet Pipe Diameter (mm)	DN40	DN40	DN40	DN50	DN50
Hot Water Pipe Diameter (mm)	DN40	DN40	DN40	DN50	DN50
Drain Pipe Diameter (mm)	DN65	DN100	DN100	DN100	DN100
Inner Drum Diameter ×Depth (mm)	Φ820	Φ900	Φ1080	Φ1310	Φ1310
Inner Drum Depth (mm)	570	660	680	750	970
Total Weight(Kg)	1350	2200	2600	3260	3360
Overall Dimensions L×W×H(mm)	1245×1480×1770	1360×1690×1850	1540×1710×2025	1815×2090×2390	1815×2310×2390



Front side

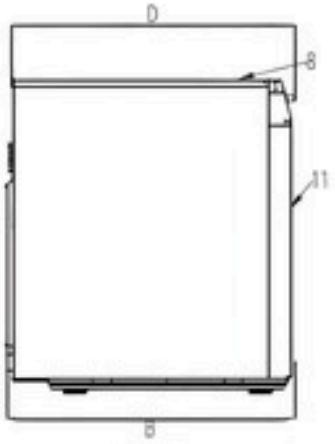

Right side

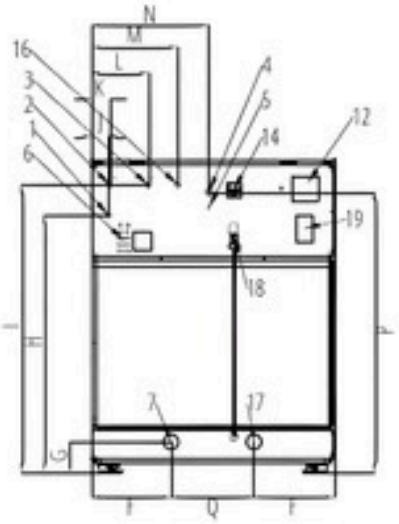

Rear side

1. Steam Inlet
2. Hot Water
3. Cold Water
4. Electrical Connection
5. Grounding Connection
6. Liquid Detergent Connection and Breather
7. Drain
8. Detergent Dispenser
9. Control Panel
10. Emergency Stop Button
11. Door Handle
12. Electric Cabinet Cooling Fan Filter
13. USB Port
14. Power Switch
15. Status Light
16. 3rd Water Inlet
17. Water Recycle
18. Sampling Hose
19. Serial Plate

Unit	A (width)	B (depth)	C (height)	D	E	E'	F	G	H	I	J	K	L	M	N	O	P	Q
mm	977	1131	1413	1095	470	543	287	159	1210	1338	75	95	255	400	500	52	1308	400
in	38.46	44.5	55.63	43.1	18.5	21.4	11.3	6.26	47.6	52.68	2.95	3.74	10.04	15.75	19.7	2.05	51.5	15.75

KINGSTAR SERIES
BARRIER WASHER
CLM

Designed to meet the stringent standards of cleanroom environments, this advanced washer-extractor features a dual-compartment isolation system that ensures complete separation of clean and contaminated zones.

MODELS
1. N2050
2. N2070
3. N2100

TOUCH SCREEN
- 10-inch full LCD touch screen, simple and easy to operate, automatically add chemical, one -click to easily complete the entire washing process.

HIGH EFFICIENCY
- The design of large-diameter water inlet, automatic feeding system and optional double drainage can help you shorten the washing time, improve the efficiency and reduce the cost.



FEATURES
- There are 30 sets of washing programs to choose , and 5 sets of common automatic washing programs are available.

OPTIMIZED DESIGN
- The design of oversized stainless steel clothing door and electronic door control device not only improves the safety in use, but also meets the needs of loading more linen.

CUSTOMIZED INNER DRUM
- The inner and outer cylinders of the washer extractor and the parts in contact with water are all made of 304 stainless steel to ensure that the washer extractor will never rust, and there will be no washing quality accidents caused by the rusting of the washer extractor

OTHERS
- The washer extractor adopts high-quality aluminum alloy integrated bearing bracket to ensure the assembly accuracy of the shaft, as well as the effects of shock resistance, rust resistance and corrosion resistance, and is durable.

FEATURES



- Inner drum mesh is designed with 3mm bore diameter , effectively improve the washing rate of clothes, and do not hang zipper, buttons, etc.



- Electric components are all famous brands.The inverter is customized by Mitsubishi.

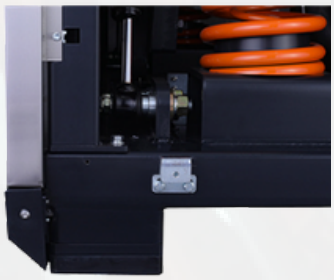

- The main transmission uses a 3 bearing design, which is high in strength, which can ensure 10 years maintenance free.

BARRIER WASHER
DATA SHEET

Specification Model	N2050	N2070	N2100
Water Consumption (L/cycle)	650	860	1150
Compressed Air Consumption (m³/h)	0.15	0.15	0.15
Compressed Air Pipe Diameter (mm)	Φ8	Φ8	Φ8
Compressed Air Pressure (MPa)	0.5	0.6	0.6
Steam Consumption (kg/h)	50	70	100
Water Inlet	DN25	DN40	DN40
Steam Inlet	DN25	DN25	DN25
Drain Outlet	DN63	DN100	DN100
Recommended Capacity (Kg)	50	70	100
Power (kW)	5.5	7.5	11
Inner Drum Size (mm)	1064×570×506	1064×830×730	1220×860×1005
External Dimensions (mm)	1390×1500×2140	1610×1500×2140	1720×1550×2265
Total Machine Weight (Kg)	2100	2650	3200

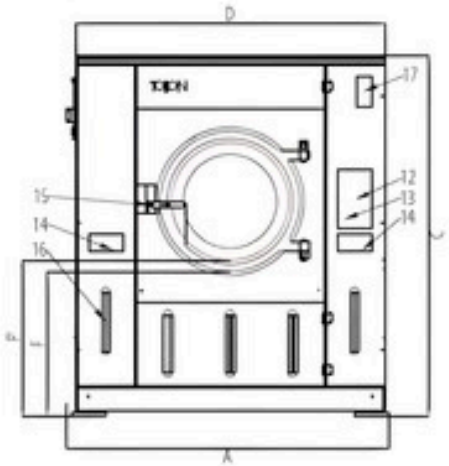

Front side

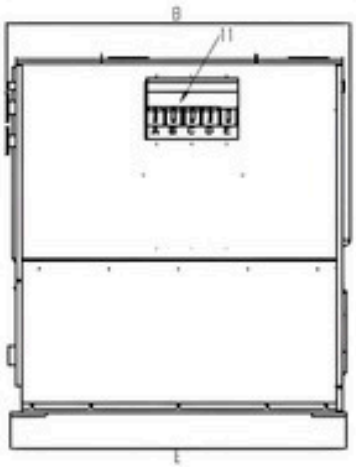

Right side

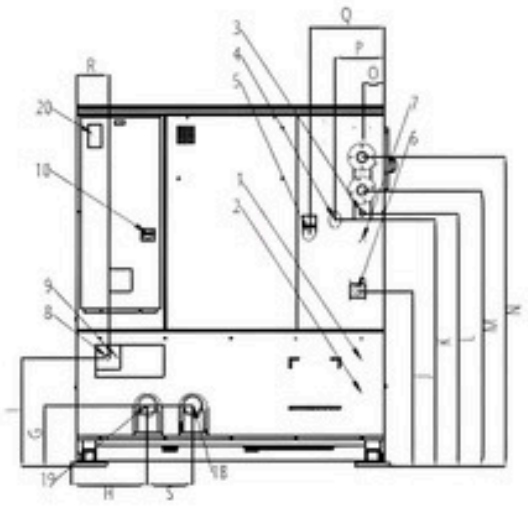

Rear side

1. Cold Water
2. Hot Water
3. Water Inlet (for detergent)
4. Liquid Detergent
5. Breather
6. Steam Inlet
7. Air Preparation
8. Electrical Connection
9. Grounding Connection
10. Power Switch
11. Detergent Dispenser
12. Control Panel
13. USB Port
14. Emergency Stop Button
15. Door Handle
16. Bumper
17. Status Light
18. Drain
19. Water Recycle
20. Serial Plate

Unit	A (width)	B (depth)	C (height)	D	E	F	F'	G	H	I	J	K	L	M	N	O	P	Q	R	S
mm	1858	1979	2074	1773	1930	847	902	346	437	620	1006	1410	1450	1581	1771	129	284	436	181	262
in	73.1	77.9	81.7	69.8	76	33.3	35.5	13.6	17.2	24.4	39.6	55.5	57.1	62.2	69.7	5.1	11.2	17.2	7.1	10.3

TUNNEL WASHER
TW-Y HOSPITAL SERIES 60/80 KG
CLM

Designed to meet the stringent standards of cleanroom environments, this advanced washer-extractor features a dual-compartment isolation system that ensures complete separation of clean and contaminated zones.

MODELS
1. TW-60
2. TW-80



HIGH EFFICIENCY
- Low damage rate: The pressing machine is a heavy frame structure with high strength and a lower damage rate.
- Energy-saving: The minimum water consumption for washing per kg of linen is approximately 5kg
- High efficiency: 1.8 tons/hour washing volume (60 kg ×16 compartments).

OPTIMIZED DESIGN
- Special design, which is convenient for the main motor CLM laundry main cage main motor is set behind the electrical box, and the electrical box can be rotated and opened as a whole.

CUSTOMIZED INNER DRUM
- The CLM tunnel washer's inner drum is made of 4mm high-quality 304 stainless steel, and the drum connecting flange is made of 20mm stainless steel.

WATER FILTER DEVICE
- The CLM tunnel washer's filtering device is the standard configuration. Effectively filter the lint of circulating water, ensure the clean use of circulating water, and ensure the quality of washing.

FEATURES
- The bottom frame is treated with hot-dip galvanized treatment, and the anticorrosive effect is good to ensure that it will never rust.

OTHERS
- The CLM tunnel washers have good sealing performance, effectively guaranteeing no water leakage, low running noise, and stability.

FEATURES



- After the tunnel washers' inner drums are welded together and precisely processed by lathes, the entire drum beating is controlled within 5-10 silk.

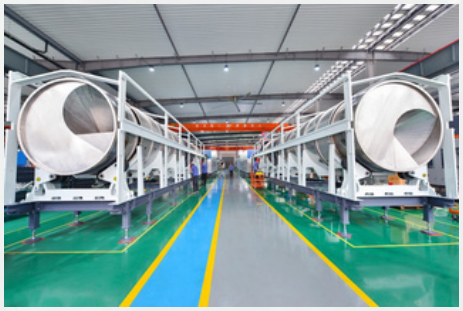

- The bottom frame of the CLM tunnel washers is designed with a 200mm thickness H-type heavy structure steel. Not easy to deform during transportation, and the strength is good.



- Bottom Transfer. It is not easy to block and damage the linen.

TUNNEL WASHER TW-Y
DATA SHEET

Model	TW-6016Y-B	TW-6016Y-Z	TW-6013Y-Z	TW-6012Y-Z
Chamber qty	16	16	13	12
Rated Washing Capacity/Chamber (kg)	60	60	60	60
Inlet Pipe Diameter	DN65	DN65	DN65	DN65
Water Inlet Pressure（bar）	2.5~4	2.5~4	2.5~4	2.5~4
Inlet Steam Diameter	DN50&DN25	DN50&DN25	DN50&DN25	DN50&DN25
Inlet Steam Pressure (bar)	4~6	4~6	4~6	4~6
Co-Air Inlet Pressure (bar)	5~8	5~8	5~8	5~8
Power (kw)	36.5	36.5	28.35	28.35
Voltage（V）	380	380	380	380
Water Consumption（kg/kg）	4.7~5.5	4.7~5.5	4.7~5.5	4.7~5.5
Electricity Consumption（kwh/h）	15	15	12	11
Steam Consumption(kg/kg)	0.3~0.4	0.3~0.4	0.3~0.4	0.3~0.4
Weight（kg）	16930	17120	14890	14390
Dimensions（Height×Width×Depth）	3304×2224×14000	3304×2224× 14000	3304×2224×11820	3304×2224×11183
Diameter of cold water pipe	DN65	DN65	DN65	DN65
Diameter of hot water pipe	DN40	DN40	DN40	DN40
Drainage mm	Ø140	Ø140	Ø140	Ø140

Model	TW-6010Y-Z	TW-6008Y-Z	TW-8014Y-Z	TW-8016Y-Z
Chamber qty	10	8	14	16
Rated Washing Capacity/Chamber (kg)	60	60	80	80
Inlet Pipe Diameter	DN65	DN65	DN65	DN60
Water Inlet Pressure（bar）	2.5~4	2.5~4	2.5~4	2.5~4
Inlet Steam Diameter	DN50	DN50&DN25	DN50&DN25	DN50&DN25
Inlet Steam Pressure (bar)	4~6	4~6	4~6	4~6
Co-Air Inlet Pressure (bar)	5~8	5~8	5~8	5~8
Power (kw)	28.35	28.35	43.35	43.35
Voltage（V）	380	380	380	380
Water Consumption（kg/kg）	4.7~5.5	4.7~5.5	4.7~5.5	4.7~5.5
Electricity Consumption（kwh/h）	10	9	16	16
Steam Consumption(kg/kg)	0.3~0.4	0.3~0.4	0.3~0.4	0.3~0.4
Weight（kg）	13400	12310	19000	21900
Dimensions（Height×Width×Depth）	3200×2224 ×9871	3200×2245 ×8500	3433×2432 ×15417	3433×2432 ×17224
Cold Water	DN65	DN65	DN65	DN65
Hot Water	DN40	DN40	DN40	DN40
Drainage mm	Ø140	Ø140	Ø140	Ø140

TUNNEL WASHER
TW-J HOTEL SERIES 60/80 KG
CLM

Designed to meet the stringent standards of cleanroom environments, this advanced washer-extractor features a dual-compartment isolation system that ensures complete separation of clean and contaminated zones.

MODELS
1. TW-60
2. TW-80



HIGH EFFICIENCY
- High cleanliness: meet the washing quality of a five-star hotel.
- Energy-saving: The minimum water consumption for washing per kg of linen is only about 5 kg
- Good stability: The tunnel washers and water extraction presses are designed with heavy structures, and the electrical components are well-known brands.

OPTIMIZED DESIGN
- After the inner drums are welded together and the precision processing of CNC lathes, the entire inner drum line bounce is controlled in 30 dmm.

CUSTOMIZED INNER DRUM
- The inner drum is made of 4 mm-thick premium 304 stainless steel, offering superior strength and deformation resistance compared to similar European and American products.

SEALING PROPERTY
- The tunnel washer's body has good sealing performance. It effectively guarantees no leakage of water and extends the service life of the sealing ring, also ensuring stable running with low noise.

FEATURES
- The design of the unique patented circulating water filter system can effectively filter the lint in the water and improve the cleanliness of rinse and recycling water.

OTHERS
- Each compartment of rinsing has an independent water inlet and drain valves.

FEATURES



- After the tunnel washers' inner drums are welded together and precisely processed by lathes, the entire drum beating is controlled within 5-10 silk.

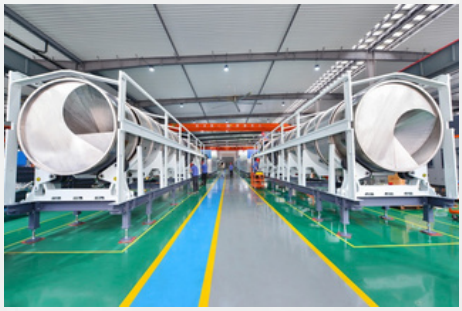

- The bottom frame of the CLM tunnel washers is designed with a 200mm thickness H-type heavy structure steel. Not easy to deform during transportation, and the strength is good.



- The bottom transfer of the CLM tunnel washer brings a lower blocked and linen damage rate.

TUNNEL WASHER TW-J
DATA SHEET

Model	TW-6016J-B	TW-6016J-Z	TW-6013J-Z	TW-6012J-Z	TW-6010J-Z	TW-6008J-Z	TW-8014J-Z	TW-8016J-Z
Chamber qty	16	16	13	12	10	8	14	16
Rated Washing Capacity/Chamber（kg	60	60	60	60	60	60	80	80
Inlet Pipe Diameter	DN65	DN65	DN65	DN65	DN65	DN65	DN65	DN60
Water Inlet Pressure（bar）	2.5~4	2.5~4	2.5~4	2.5~4	2.5~4	2.5~4	2.5~4	2.5~4
Inlet Steam Diameter	DN50&DN25	DN50&DN25	DN50&DN25	DN50&DN25	DN50	DN50&DN25	DN50&DN25	DN50&DN25
Inlet Steam Pressure (bar)	4~6	4~6	4~6	4~6	4~6	4~6	4~6	4~6
Co-Air Inlet Pressure (bar)	5~8	5~8	5~8	5~8	5~8	5~8	5~8	5~8
Power (kw)	36.5	36.5	28.35	28.35	28.35	28.35	43.35	43.35
Voltage（V）	380	380	380	380	380	380	380	380
Water Consumption（kg/kg）	4.7~5.5	4.7~5.5	4.7~5.5	4.7~5.5	4.7~5.5	4.7~5.5	4.7~5.5	4.7~5.5
Electricity Consumption（kwh/h）	15	15	12	11	10	9	16	16
Steam Consumption(kg/kg)	0.3~0.4	0.3~0.4	0.3~0.4	0.3~0.4	0.3~0.4	0.3~0.4	0.3~0.4	0.3~0.4
Weight（kg）	16930	17120	14890	14390	13400	12310	19000	21900
Dimensions（Height×Width×Depth）	3304×2224×14000	3304×2224× 14000	3304×2224×11820	3304×2224×11183	3200×2224×9871	3200×2245×8500	3433×2432×15417	3433×2432×17224
Diameter of cold water pipe	DN65	DN65	DN65	DN65	DN65	DN65	DN65	DN65
Diameter of hot water pipe	DN40	DN40	DN40	DN40	DN40	DN40	DN40	DN40
Drainage mm	Ø140	Ø140	Ø140	Ø140	Ø140	Ø140	Ø140	Ø140

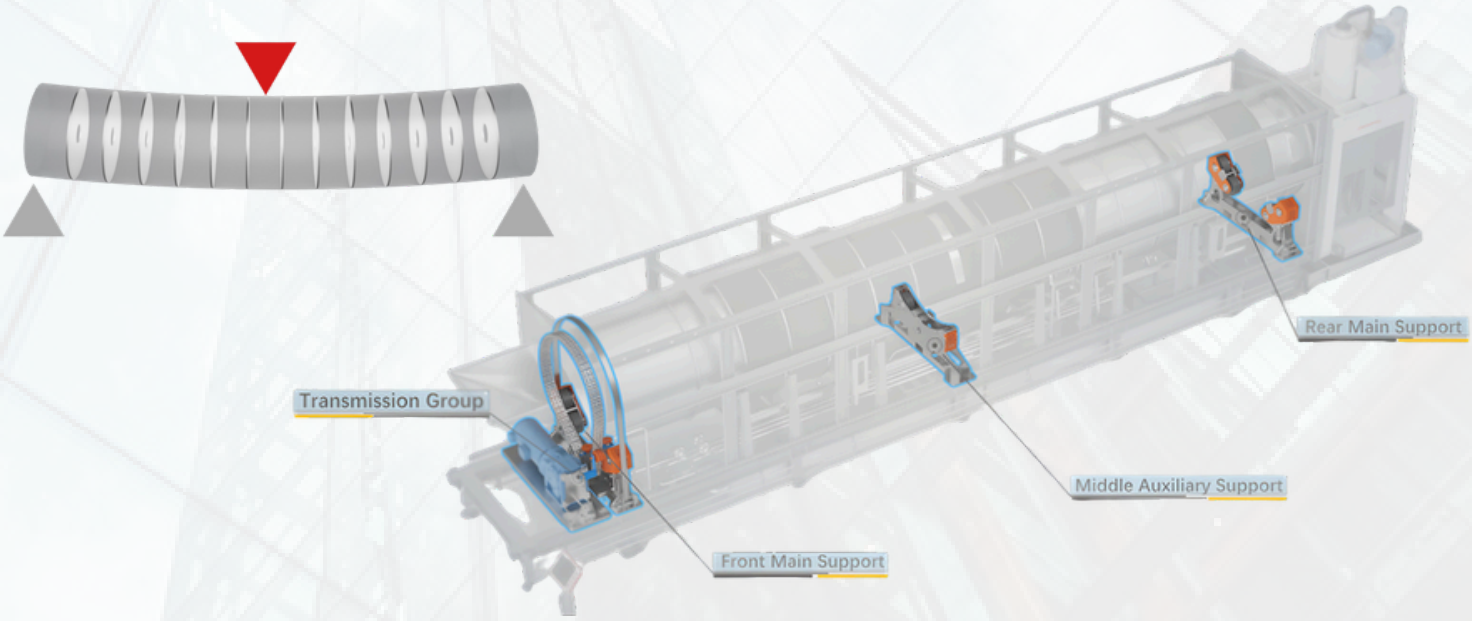

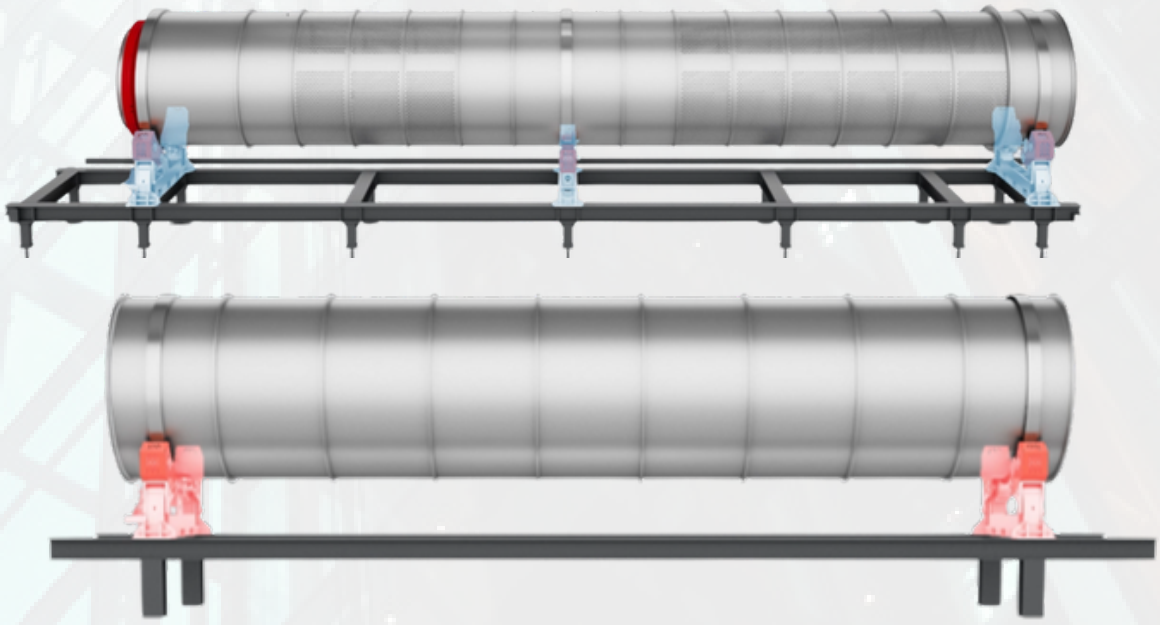

JWE SERIES
STAND ALONE WASHER EXTRACTOR
JENSEN

Stand-alone operation Heavy-duty laundries process the large volumes of linen predominantly in a highly automated washroom section. End-customers often have linen that for various reasons cannot be washed nor dried in these machines.

MODELS
1. JWE-24 KG
2. JWE-28 KG
3. JWE-40 KG
4. JWE-60 KG
5. JWE-110 KG



RESOURCES SAVING DESIGN
- The compact dimensions allow a placement in very tight spaces. The washer extractors can be positioned with a zero-space adjacent placement. This saves room for other operations.

HIGH EFFICIENCY
- Cataphoretic paint resists corrosion
- Low tolerances on the shafts, as low as ±10µm.

FEATURES
- Fast heating and low water consumption (below 10 l/kg resp. 1.2 gal/lb)
- Time savings thanks to high-capacity inlets and wide drain valve
- High-spin machine exceeding 360 G, depending on the diameter of the drum.

OPTIMIZED DESIGN
- Easy and fast loading and unloading with the wide-swing large loading door and the conical drum opening panel: up to 180° opening angle.

CUSTOMIZED INNER DRUM
- With a perfect balance and high-quality finishing, there is at the same time no thermal damage as in welding processes and no deflection due to heat, hence no rust.

OTHERS
- Based on a very simple construction, the free-standing, high-spin machines (up to 360G) are high-performers. The minimum drum spacing allows a fast heating and reduces the water consumption down to below 10l/kg=1,2 gal/lbs on an average wash cycle.

FEATURES



- A liquid dosing connection on the backside of the washer extractors JWE 24/53, JWE 28/60 and JWE 40/90 with 13 connection points adds to the ease of use.

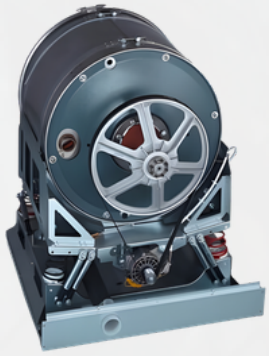

- Zero abrasion on seals thanks to the ceramic-coated shaft.



- Fast and easy setup and copying of washing and chemical programs through the USB ports.

JWE STAND ALONE WASHER
DATA SHEET

TECHNICAL DATA	JWE-24KG	JWE-28KG	JWE-40KG	JWE-60KG	JWE-110KG
Dry load	24 Kg	28 Kg	40 Kg	60 Kg	110 Kg
Performance	36 kg / Hour	42 kg / Hour	60 Kg / Hour	90 Kg / Hour	165 kg / Hour
Cycle time	30 - 45 Min	30 - 45 Min	30 - 45 Min	30 - 45 Min	30 - 45 Min
Sound level	90 db	90 db	90 db	90 db	90 db
Motor	4 kW	4 kW	5.5 kW	11 kW	22 kW
DRUM					
Drum diameter	700 mm	700 mm	900 mm	1100 mm	1300 mm
Drum depth	630 mm	720 mm	575 mm	610 mm	830 mm
Drum volume	242 L	277 L	385 L	579 L	1101 L
Wash speed	37 rpm	37 rpm	37 rpm	34 rpm	29 rpm
Extraction speed	961 rpm	961 rpm	847 rpm	770 rpm	705 rpm
G-Force	360 G	360 G	360 G	360 G	360 G
DOOR					
Door opening	455 mm	455 mm	560 mm	550 mm	675 mm
HEATING					
Steam	4-6 bar	4-6 bar	4-6 bar	4-6 bar	4-6 bar
Steam valve connection Ø	DN 15	DN 15	DN 20	DN 25	40-1 1/2" DN-BSP
Steam consumption	12 kg / cycle	14 kg / cycle	20 kg / cycle	28 kg / cycle	50 kg/cycle
WATER					
Inlet valve connection	2 x DN 20	2 x DN 20	2 x DN 20	2 x DN 25	2 x 50-2" DN-BSP
Water inlet (detergent)	DN 25	DN 25	DN 25	DN 25	1 x 25-1" DN-BSP
Water pressure	200-400 kPa	200-400 kPa	200-400 kPa	200-400 kPa	200-400 kPa
Water flow	120 l/min	120 l/min	120 l/min	160 l/min	540 l/min
water consumption (Cold)	177 L	206 L	288 L	434 L	310 l/cycle
water consumption (Hot)	49 L	58 L	80 L	121 L	395 l/cycle
Drain valve connection (outer) 200 mm	76 mm	76 mm	76 mm	76 mm	114 mm
Drain flow	230 l/min	230 l/min	230 l/min	230 l/min	600 l/min
DIMENSIONS					
Standard WxDxH	982 x 1355 x 1547 mm	982 x 1445 x 1547 mm	1195 x 1470 x 1704 mm	1636 x 1432 x 1911 mm	1910 x 2040 x 2060 mm
Packing WxDxH	1050 x 1450 x 1660 mm	1050 x 1550 x 1660 mm	1235 x 1550 x 1755 mm	1650 x 1500 x 2051 mm	2000 x 2150 x 2200 mm
Weight	710 kg	800 kg	1050 kg	1850 kg	3950 kg

JBW SERIES
BARRIER WASHER - JBW
JENSEN

A **Barrier washer extractor** ensures the most reliable protection from spreading germs and bacteria, as it avoids any contamination of the linen by providing maximum disinfection.

MODELS
1. JBW-120 KG
2. JBW-140 KG
3. JBW-170 KG
4. JBW-200 KG
5. JBW-230 KG





WASHING PROGRAM
- Laundries can set up specifically desired washing programs with customized cycle times, water levels, temperatures and extract speeds, allowing a variety of linen types and volumes to be processed.

HIGH EFFICIENCY
- JBW are made with air-bag suspension, which provides maximum absorption of vibration and is lowering the ground and laundry-construction load.

FEATURES
- All machines are designed to offer the highest quality of washing with minimum water, energy and chemical consumption. Thanks to the design having minimal space between the outer and inner drum, the amount of free water is remarkably low.

ROBUST DESIGN
- All parts of the machine that come in direct contact with water are made of top quality AISI 304 stainless steel material or optional AISI 316 for Clean Room installations.

CUSTOMIZED INNER DRUM
- With a perfect balance and high-quality finishing, there is at the same time no thermal damage as in welding processes and no deflection due to heat, hence no rust.

OTHERS
- With the range of 11 machines of different load sizes and implementations, the JENSEN Barrier Washer extractors can meet individual requirements. Volumes can be easily adapted when the business grows. The JENSEN Barrier Washer extractors (JBW) can process volumes of 16 / 35, 26 / 55, 38 / 80, 50 / 110, 70 / 155, 90 / 200, 120 / 265, 140 / 310, 170 / 375, 200 / 440 and 230 / 510 kg resp. lb.

FEATURES



- Construction of inner drum ribs and doors to achieve a unique effect of mechanical action of the linen.

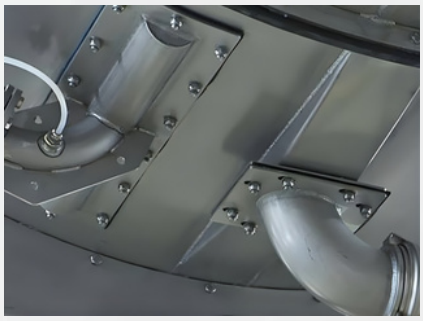

- Statistics data collection in database for all the JBW connected to the system.

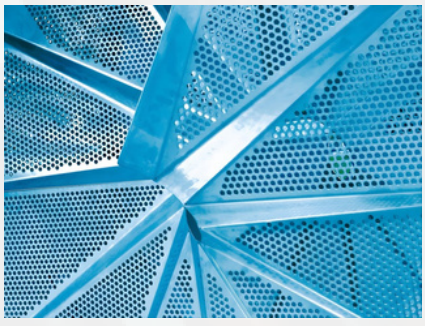

- Safe and User friendly operations, All the parts subject to maintenance are easily acessible.

JBW BARRIER WASHER
DATA SHEET

Description	Unit	JBW 120	JBW 140	JBW 170	JBW 200	JBW 230
Drum						
Drum Volume	L	1100	1300 - 1400	1700	2000	2300
Drum Diameter	mm	1300	1400	1500	1600	1700
Drum Depth	mm	830	850 - 900	950	1000	1100
Wash Speed	RPM	28 - 30	25 - 30	25	20 - 25	18 - 22
Extraction Speed	RPM	700 -750	650 - 720	600 - 700	550 - 650	500 - 600
G-Factor	G	350 360	320 - 350	300 - 320	280 - 300	250 - 280
Motor & Drive						
Motor Power	kW	11 - 15 kW	15 - 18.5	18.5 - 22	22 - 30	30
Drive	-	VFD Contolled	Heavy Duty VFD	VFD	Inverter Controlled	Heavy Duty Inverter
Transmission	-	Belt / Direct	-	-	-	-
Electrical						
Supply	V	400V / 3Ph / 50 HZ	400V / 3Ph / 50 HZ	400V / 3Ph / 50 HZ	400V / 3Ph / 50 HZ	400V / 3Ph / 50 HZ
Control	-	PLC + HMI	24V DC	PLC	IP 54	PLC + Touch Screen
Protection	-	Overload + Phase Protection	-	-	-	-
DIMENSIONS						
Water Inlet	DN	40	40 - 50	50	50	65
Steam	bar	3 - 6	DN 25	25	32	32
Drain	DN	100	100	125	125	125

TUNNEL WASHER

TUNNEL WASHER UNIQ
JENSEN

The brand new **JENSEN UniQ** tunnel washer combines proven premium technology with new innovative features and guarantees best performance and short ROIs.



HIGH EFFICIENCY

- Lowest water consumption thanks to a patented rinse process for quickest dilution and an outstanding water recovery concept.
- Water consumption of only 1.6 l/kg or 0.19 gal./lbs confirmed for the BlueEdition version.

OPTIMIZED DESIGN

- The new patented UVClean system for perfect hygiene prevents bacterial growth in double drum sections automatically and without any chemical supply. Successful field tests confirm that bacterial growth was prevented on the inner and outer drum.

CUSTOMIZED INNER DRUM

- The heart of the tunnel washer is its drum with an eccentric Archimedean helix that makes optimum use of the drum volume.

HIGHEST PRODUCTIVITY

- Lowest water consumption thanks to a patented rinse process for quickest dilution and an outstanding water recovery concept.
- A patented rinsing process guarantees that fresh water consumption is reduced by up to 10%.

FEATURES

- Runs perfectly smooth. EcoTune controls the precise rotation of the drum and ensures a smooth change in the direction of rotation.
- It also improves wash quality and gently processes delicate linen.

OTHERS

- Compared to other tunnel washers, which require a significantly larger drum diameter, the drum diameter of the UniQ is utilized much more efficient thanks to its patented eccentric Archimedean helix.

FEATURES

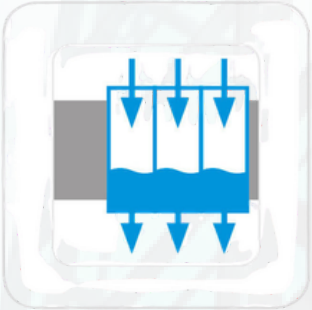

- FlexWash and FlexRinse Technology guarantee full batch integrity in the entire machine, thus complete batch separation and full process flexibility.

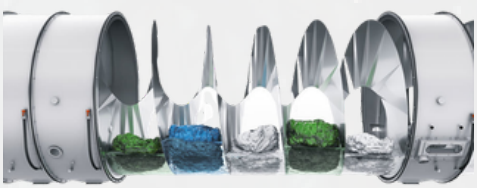

- JENSEN tunnel washers have the shortest transfer times in the industry. The entire batch is transported to the next compartment in just 4 seconds.



- The new ErgoVision video monitoring of the loading and unloading process ensures a higher operational safety.

TUNNEL WASHER UNIQ
DATA SHEET

Description	Unit	Details
Machine Configuration		
Chambers	Comp.	8 - 16 Comp
Capacity per chamber	KG	30 - 60
Throughput	Kg / Hr	800 - 1500
Electrical Data		
Power Supply	V	400 - 415V / 3 Phase / 50 HZ
Installed Power	kW	30 - 80 kW
Electricity Consumption	kWh	9 - 18 kWh
Control System		PLC + HMI / SCADA
Water System		
Pipe Connection		
Cold Water Inlet Diameter	DN	65
Hot Water Inlet Diameter	DN	40 - 50
Main Water header	DN	65 - 80
Water Pressure		
Required Pressure	bar	2.5 - 4.5
Water Consumption		
Standard System	L/Kg	3 - 5
High Efficiency	L/Kg	1.6
Steam System		
Steam Connection		
Steam Inlet Diameter		
Main	DN	40 - 65
Injection Lines	DN	25 - 40
Steam Pressure		
Operating Pressure	bar	04-Aug
Steam consumption		
Typical Consumption	kg steam / kg linen	0.3 - 0.6
Compressed Air System		
Air Inlet Pressure	bar	6 - 8
Air Connection Size	DN	15 - 25
Drain System		
Drain Diameter	mm	125 - 150
Drain Type		High Capacity
Discharge System		Pneumatic Dump Valves
Dimensions		
Length	mm	8500 - 17000
Width	mm	2200 - 2500
Height	mm	3200 - 3500
Weight	kG	12000 - 22000

INDUSTRIAL DRYERS

Industrial dryers are designed for fast, efficient drying in high-demand laundry environments. Built with durable components and advanced airflow technology, they ensure reliable performance and consistent results. Ideal for commercial laundries, hotels, and healthcare facilities.



GOLD TUMBLE DRYERS
DD SERIES 11-14-18-22-28 ET2
DANUBE

The **DD-GOLD ET2** range of dryers is the most efficient of all the Danube dryer ranges, as it comes as standard with all the functions and features that combine performance and savings.

MODELS
1. DD-11 GOLD
2. DD-14 GOLD
3. DD-18 GOLD
4. DD-22 GOLD
5. DD-28 GOLD



EASY TOUCH 2
- User friendly and totally programmable 7" ET2
- Online platform freeof chargefor programming, telemetry, data analysis Videos ondisplay (ads, instructions, etc.)
- Videosdisplay (ads, instructions...)
- 37 available languages.

EFFICIENCY
- **CARE DRY** - Intelligent humidity control with new drum inlet temperature control.
- **AIR RE-CYCLE** - Efficient air recirculation system.
- **INSULATED PANELS** - Complete thermal insulation of panels and double door glass.
- **OPTIMAL FLOW** - New optimized system of mixed airflow Big fluff filter.

VERSATILITY
- Make to order-customization
- WET CLEANING

CONNECTIVITY
- Danube Online communication - IoT as standard
- Remote technical service.
- Management of laundries.

ERGONOMICS
- Drawer as fluff filter, stainless steel mesh
- Big door diameters
- Opening sense of door adjustable on site.

MAINTENANCE
- Hinged control panel: Easy and ergonomic access.
- Technical menu: statistics, data recovery for after-sales service.

OTHERS
- Grey skinplate outer casing, stainless steel look.
- NEW : transmission by gear motor on models DD-45 to 80.
- SOFT DRY - new drum with stamped holes.
- COOL DOWN - anti-wrinkle at the end of the cycle.
- Electric, gas or steam heating.
- CE approved.

FEATURES

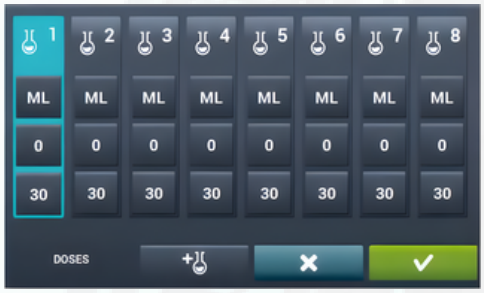

8 Dosing Signals as Standard
+Optional 6 Extra Dosing Signals

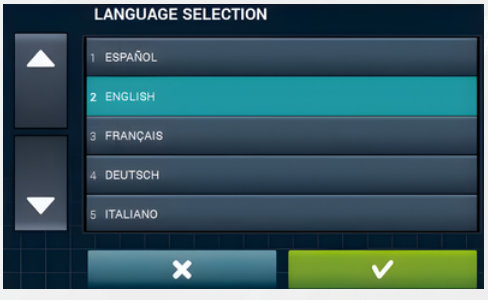

37 Laungauges Accessible to everyone.

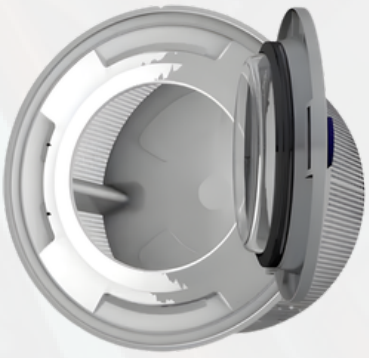

Easy Opening/closing System
Door Lock

DD SERIES 11-14-18-22-28 GOLD ET2
DATA SHEET

DRUM	Unit	DD-11 GOLD ET2	DD-14 GOLD ET2	DD-18 GOLD ET2	DD-22 GOLD ET2	DD-28 GOLD ET2
Capacity 1/8	Kg	11,7	15	18,3	24,4	30,6
	lb	25,7	33,1	40,4	53,9	67,3
Capacity 1/20	Kg	10,5	13,5	16,5	22	27,5
	lb	25	30	35	50	65
Ø Drum	mm	750	750	750	835	947
	inch	29,5	29,5	29,5	32,9	37,3
Drum length	l	475	610	746	800	780
	cu ft	18,7	24	29,4	31,5	30,7
Drum volume	mm	210	270	330	440	550
	inch	7,41	9,53	11,64	15,54	19,42
Ø Door hole	mm	574	574	574	574	802
	inch	22,6	22,60	22,60	22,60	31,6
Door center height	mm	976	976	976	1.03	1.04
	inch	38,4	38,4	38,4	40,6	40,9
Height from floor to bottom of door	mm	618	618	618	672	578
	inch	24,33	24,33	24,33	26,46	22,74
ELECTRIC HEATING						
Evaporation capacity Hourly output	L/h	11	14,5	14,90	20	26,80
	US gallon/h	2,91	3,83	3,94	5,28	7,08
Hourly Output	Kg/h	21,7	29	30	40	51,60
	lb/h	47,84	63,93	66,14	88,18	113,76
Installed heating power	kW	12	18	18	24	30
Installed electrical power	kW	12,97	18,97	18,97	25,17	31,35
Drum motor power	kW	0,37	0,37	0,37	0,37	0,55
GAS HEATING						
Evaporation capacity (gas model)	L/h	14,95	15,60	16,80	22,30	31,80
	US gallon/h	3,95	4,12	4,44	5,89	8,40
Hourly output (gas model)	Kg/h	30	31,20	33,40	44,60	61,10
	lb/h	66,14	68,78	73,63	98,33	134,70
Installed gas heating power	kcal/h	17627	17627	17627	26655	35254
	Btu/h	69996	69996	69996	105776	139899
Installed gas heating power	kW	20,5	20,5	20,5	31	41
Installed electrical power	kW	0,97	0,97	0,97	1,17	1,35
Instant propane gas consumption (G31)	Kg/h	1,76	1,76	1,76	2,66	3,51
	lb/h	3,88	3,88	3,88	5,86	7,74
Instant natural gas consumption (G20)	m³/h	2,17	2,17	2,17	3,28	4,34
	cfm	1,28	1,28	1,28	1,93	2,55
Ø Gas inlet	BSPP ISO 228-1	1/2"	1/2"	1/2"	1/2"	1/2"
STEAM HEATING						
Installed steam heating power	kW	30	30	30	49,20	50,10
	Btu/h	102364	102364	102364	167877	170948
Installed electrical power	kW	0,97	0,97	0,97	1,17	1,35
Steam consumption (8 barG) - Standard	kg/h	53	53	53	87	89
Steam consumption (116 psiG)	lb/h	63,8	63,8	63,8	104,8	107,2
Steam pressure	barG	06/09	06/09	06/09	06/09	06/09
	psiG	87 - 130,5	87 - 130,5	87 - 130,5	87 - 130,5	87 - 130,5
Standard steam inlet - outlet	BSPT- ISO7.1	3/4"	3/4"	3/4"	1"	1"
Standard steam inlet - condensate outlet	NPT ANSI B1.20.1 Tapered	3/4"	3/4"	3/4"	1"	1"
Steam consumption (5 barG) - Low Pressure	kg/h	57	57	57	-	93
Steam consumption (72,5 psiG) - Low Pressure	lb/h	68,7	68,7	68,7	-	112
Steam pressure (low pressure)	barG	03/06	03/06	03/06	03/06	03/06
	psiG	43,5 - 88	43,5 - 88	43,5 - 88	43,5 - 88	43,5 - 88
Low pressure steam inlet - outlet	BSPT- ISO7.1	1"	1"	1"	1"	1" 1/2
VENTILATION						
Fan motor power	kW	0,55	0,55	0,55	0,75	0,75
Nominal air flow rate	m³/h	1.2	1.2	1.2	1.5	1.5
	cfm	706	706	706	883	883
Ø Fume exhaust	mm	200	200	200	200	200
Ø Fume exhaust	inch	7,87	7,87	7,87	7,87	7,87
HEAT EMISSION						
Maximum total heat emission	kW	1	1,4	1,4	1,9	2,4
	Btu/h	3278	4916	4916	6555	8194
Max. front heat emission	kW	0,6	0,9	0,9	1,2	1,5
	Btu/h	2048	3073	3073	4097	5121

CONNECTIONS		E	G/S	E	G/S	E	G/S	E	G/S	E	G/S
Tension 230V - I + N + T	N° x mm² / A	3 x 25 / 63A	3 x 1,5 / 16A	-	3 x 1,5 / 16A	-	3 x 1,5 / 16A	-	3 x 1,5 / 16A	-	3 x 1,5 / 16A
Tension 230V - III + T	N° x mm² / A	4 x 10 / 40A	3 x 1,5 / 16A	4 x 16 / 63A	3 x 1,5 / 16A	4 x 16 / 63A	3 x 1,5 / 16A	4 x 25 / 80A	3 x 1,5 / 16A	4 x 35 / 100A	3 x 1,5 / 16A
Tension 400V - III + N + T	N° x mm² / A	5 x 4 / 25A	3 x 1,5 / 16A	5 x 10 / 32A	3 x 1,5 / 16A	5 x 10 / 32A	3 x 1,5 / 16A	5 x 10 / 40A	3 x 1,5 / 16A	5 x 16 / 63A	3 x 1,5 / 16A

NET DIMENSIONS / PACKING DIMENSIONS						
Net / gross width	mm	785 / 865	785 / 865	785 / 865	890 / 970	985 / 1.065
	inch	30,9 / 34,1	30,9 / 34,1	30,9 / 34,1	35 / 38,2	38,8 / 41,9
Net / gross depth	mm	855 / 940	989 / 1.074	1.125 / 1.210	1.255 / 1.345	1.054 / 1.154
	inch	33,7 / 37	38,9 / 42,3	44,3 / 47,6	49,4 / 53	41,5 / 45,4
Net height / gross height	mm	1.694 / 1.840	1.694 / 1.840	1.694 / 1.840	1.812 / 1.940	1.975 / 2.080
	inch	66,7 / 72,4	66,7 / 72,4	66,7 / 72,4	71,3 / 76,4	77,8 / 81,9
Net / gross weight	Kg	172 / 180	180 / 190	187 / 200	210 / 230	230 / 260
	lb	379 / 397	397 / 419	412 / 441	463 / 507	507 / 573
OTHERS						
Sound level	dB	64	64	64	65	65

GOLD TUMBLE DRYERS
DD SERIES 35-45-60-80 ET2
DANUBE

The **DD-GOLD ET2** range of dryers is the most efficient of all the Danube dryer ranges, as it comes as standard with all the functions and features that combine performance and savings.

MODELS
1. DD-35 GOLD
2. DD-45 GOLD
3. DD-60 GOLD
4. DD-80 GOLD

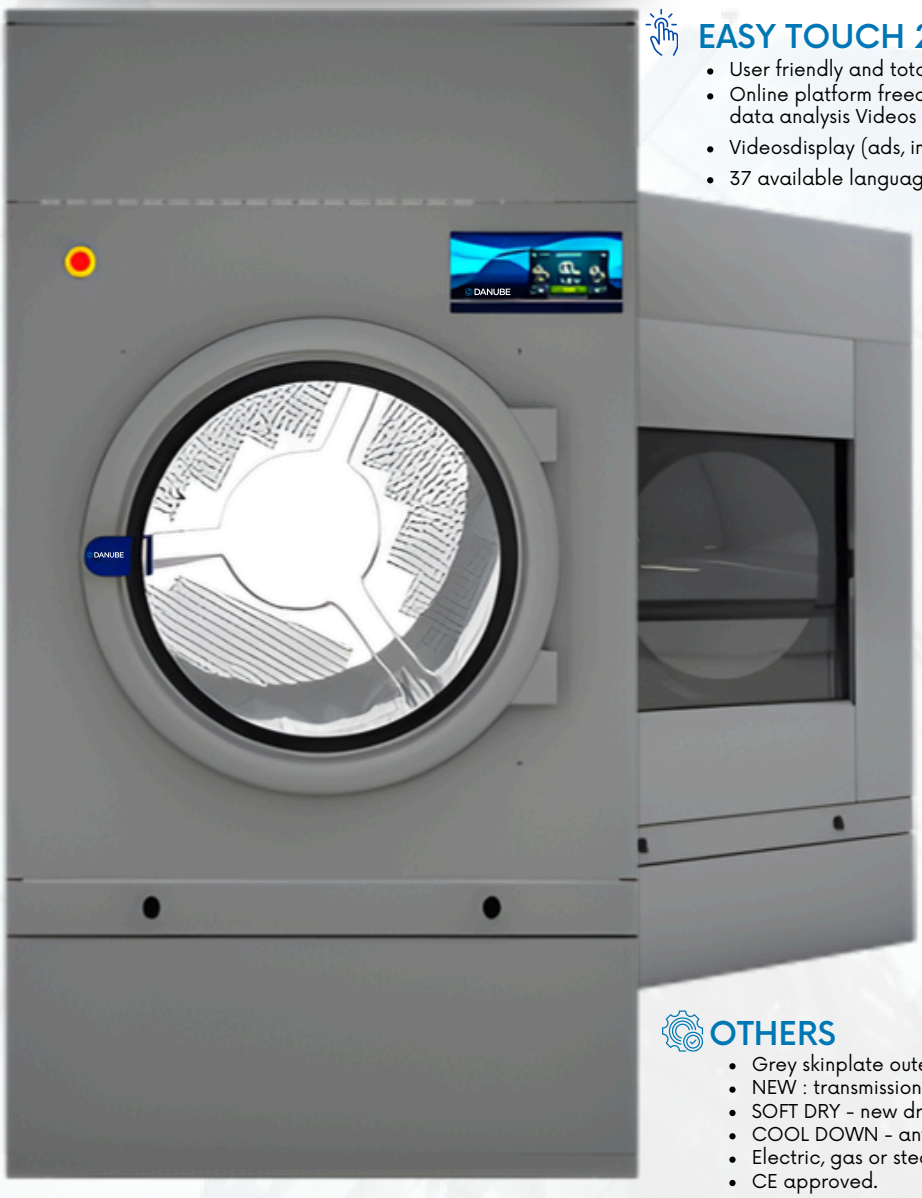

EASY TOUCH 2
- User friendly and totally programmable 7" ET2
- Online platform freeof chargefor programming, telemetry, data analysis Videos ondisplay (ads, instructions, etc.)
- Videosdisplay (ads, instructions...)
- 37 available languages.

EFFICIENCY
- **CARE DRY** - Intelligent humidity control with new drum inlet temperature control.
- **AIR RE-CYCLE** - Efficient air recirculation system.
- **INSULATED PANELS** - Complete thermal insulation of panels and double door glass.
- **OPTIMAL FLOW** - New optimized system of mixed airflow Big fluff filter.

VERSATILITY
- Make to order-customization
- WET CLEANING

CONNECTIVITY
- Danube Online communication - IoT as standard
- Remote technical service.
- Management of laundries.

ERGONOMICS
- Drawer as fluff filter, stainless steel mesh
- Big door diameters
- Opening sense of door adjustable on site.

MAINTENANCE
- Hinged control panel: Easy and ergonomic access.
- Technical menu: statistics, data recovery for after-sales service.

OTHERS
- Grey skinplate outer casing, stainless steel look.
- NEW : transmission by gear motor on models DD-45 to 80.
- SOFT DRY - new drum with stamped holes.
- COOL DOWN - anti-wrinkle at the end of the cycle.
- Electric, gas or steam heating.
- CE approved.

FEATURES

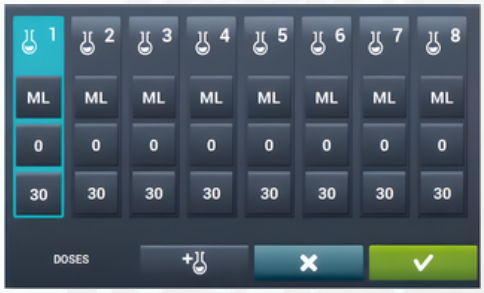

8 Dosing Signals as Standard
+Optional 6 Extra Dosing Signals

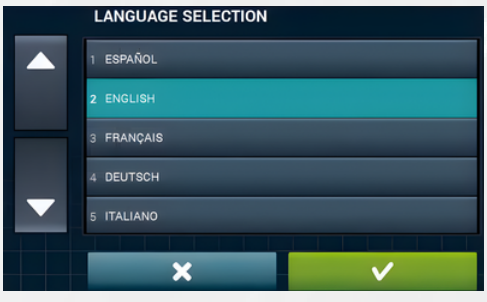

37 Laungauges Accessible to everyone.



Easy Opening/closing System
Door Lock

DD SERIES 35-45-60-80 GOLD ET2
DATA SHEET

DRUM	Unit	DD-35 GOLD ET2		DD-45 GOLD ET2		DD-60 GOLD ET2		DD-80 GOLD ET2	
Capacity 1/8	Kg	36,7		50		66,7		83,3	
	lb	80,8		110,2		146,9		183,6	
Capacity 1/20	Kg	33		45		60		75	
	lb	80		100		135		180	
Ø Drum	mm	947		1.225		1.225		1.225	
	inch	37,3		48,2		48,2		48,2	
Drum length	l	936		760		1.02		1.252	
	cu ft	36,9		29,9		40,2		49,3	
Drum volume	mm	660		900		1,2		1,5	
	inch	23,30		31,78		42,37		52,95	
Ø Door hole	mm	802		802		802		802	
	inch	31,6		31,6		31,6		31,6	
Door center height	mm	1.04		1.275		1.275		1.275	
	inch	40,9		50,2		50,2		50,2	
Height from floor to bottom of door	mm	578		813		813		813	
	inch	22,74		31,99		31,99		31,99	
ELECTRIC HEATING									
Evaporation capacity Hourly output	L/h	31,50		45		64		68,20	
	US gallon/h	8,32		11,89		16,91		18,02	
Hourly Output	Kg/h	63,90		90		128,60		136,40	
	lb/h	140,87		198,41		283,51		300,71	
Installed heating power	kW	36		54		72		72	
Installed electrical power	kW	37,35		57		75,35		75,75	
Drum motor power	kW	0,55		0,75		1,10		1,50	
GAS HEATING									
Evaporation capacity (gas model)	L/h	34,70		48,20		72		93,80	
	US gallon/h	9,17		12,73		19,02		24,78	
Hourly output (gas model)	Kg/h	73,30		96,40		144		187,50	
	lb/h	161,60		212,52		317,46		413,36	
Installed gas heating power	kcal/h	35254		51591		77386		103181	
	Btu/h	139899		204728		307093		409457	
Installed gas heating power	kW	41		60		90		120	
Installed electrical power	kW	1,35		3		3,35		3,75	
Instant propane gas consumption (G31)	Kg/h	3,51		5,14		7,71		10,28	
	lb/h	7,74		11,33		17		22,66	
Instant natural gas consumption (G20)	m³/h	4,34		6,35		9,53		12,71	
	cfm	2,55		3,74		5,61		7,48	
Ø Gas inlet	BSPP ISO 228-1	1/2"		3/4"		3/4"		3/4"	
STEAM HEATING									
Installed steam heating power	kW	50,10		91		128		128	
	Btu/h	170948		310505		436754		436754	
Installed electrical power	kW	1,35		3		3,35		3,75	
Steam consumption (8 barG) - Standard	kg/h	89		121		171		171	
Steam consumption (116 psiG)	lb/h	107,2		145,8		206		206	
Steam pressure	barG	06/09		07/12		07/12		07/12	
	psiG	87 - 130,5		101,5 - 175		101,5 - 175		101,5 - 175	
Standard steam inlet - outlet	BSPT- ISO7.1	1"		1"		1"		1"	
Standard steam inlet - condensate outlet	NPT ANSI B1.20.1 Tapered	1"		1"		1"		1"	
Steam consumption (5 barG) - Low Pressure	kg/h	93		142		147		147	
Steam consumption (72,5 psiG) - Low Pressure	lb/h	112		171,1		177,1		177,1	
Steam pressure (low pressure)	barG	03/06		04/07		04/07		04/07	
	psiG	43,5 - 88		58 - 101,5		58 - 101,5		58 - 101,5	
Low pressure steam inlet - outlet	BSPT- ISO7.1	1" 1/2		1" 1/2		1" 1/2		1" 1/2	
VENTILATION									
Fan motor power	kW	0,75		2,20		2,20		2,20	
Nominal air flow rate	m³/h	1.5		4.5		4.5		4.5	
	cfm	883		2649		2649		2649	
Ø Fume exhaust	mm	200		300		300		300	
Ø Fume exhaust	inch	7,87		11,81		11,81		11,81	
HEAT EMISSION									
Maximum total heat emission	kW	2,9		3,8		5		5	
	Btu/h	9833		12905		17207		17207	
Max. front heat emission	kW	1,8		1,1		1,4		1,4	
	Btu/h	6145		3687		4916		4916	
CONNECTIONS		E	G/S	E	G/S	E	G/S	E	G/S
Tension 230V - I + N + T	N° x mm² / A	-	3 x 1,5 / 16A	-	-	-	-	-	-
Tension 230V - III + T	N° x mm² / A	4 x 50 / 125A	3 x 1,5 / 16A	-	4 x 2,5 / 20A	-	4 x 2,5 /25A	-	4 x 2,5 /25A
Tension 400V - III + N + T	N° x mm² / A	5 x 16 /63A	3 x 1,5 / 16A	5 x 35 / 100A	5 x 2,5 / 20A	5 x 50 / 125A	5 x 2,5 /25A	5 x 50 / 125A	5 x 2,5 /25A
NET DIMENSIONS / PACKING DIMENSIONS									
Net / gross width	mm	985 / 1.065		1.270 / 1.330		1.270 / 1.330		1.270 / 1.330	
	inch	38,8 / 41,9		50 / 52,4		50 / 52,4		50 / 52,4	
Net / gross depth	mm	1.210 / 1.310		1.106 / 1.185*		1.366 / 1.455		1.598 / 1.705	
	inch	47,6 / 51,6		43,5 / 46,65*		53,8 / 57,3		62,9 / 67,1	
Net height / gross height	mm	1.975 / 2.080		2.380 /2.200		2.380 /2.200		2.380 /2.200	
	inch	77,8 / 81,9		93,7 / 86,6		93,7 / 86,6		93,7 / 86,6	
Net / gross weight	Kg	260 / 285		395 / 430		529 / 575		657 / 715	
	lb	573 / 628		871 / 948		1.166 / 1.268		1.448 / 1.576	
OTHERS									
Sound level	dB	65		67		67		67	

SILVER TUMBLE DRYERS
DD SERIES 11-14-18-22-28 ET2
DANUBE

The **DD-SILVER ET2** range of offers a wide choice of capacities from **11 to 28 kg** for greater versatility, Designed for efficiency, these dryers deliver significant energy savings.

MODELS
1. DD-11 SILVER
2. DD-14 SILVER
3. DD-18 SILVER
4. DD-22 SILVER
5. DD-28 SILVER



EASY TOUCH 2
- User friendly and totally programmable 7" ET2
- Online platform freeof chargefor programming, telemetry, data analysis Videos ondisplay (ads, instructions, etc.)
- Videosdisplay (ads, instructions...)
- 37 available languages.

EFFICIENCY
- **DOUBLE FLOW** - mixed axial-radial air flow
- Big fluff filter as drawer
- **Reversing drum action** as standard
- **Stainless steel drum** as standard
- **Frequency inverter** as standard

VERSATILITY
- Make to order - customization
- WET CLEANING
- OPL>Multi vending - Standard OPL model easily trasformable to coin laundry uses.

CONNECTIVITY
- Danube Online communication - IoT as standard
- Remote technical service.
- Management of laundries.

ERGONOMICS
- Drawer as fluff filter, stainless steel mesh
- Big door diameters
- Opening sense of door adjustable on site.

MAINTENANCE
- Hinged control panel: Easy and ergonomic access.
- Technical menu: statistics, data Recovery for after-sales service, software updates, etc.
- Easy access to components

OTHERS
- Grey skinplate outer casing, stainless steel look.
- NEW : transmission by gear motor on models DD-45 to 80.
- SOFT DRY - new drum with stamped holes.
- COOL DOWN - anti-wrinkle at the end of the cycle.
- Electric, gas or steam heating.
- CE approved.

FEATURES

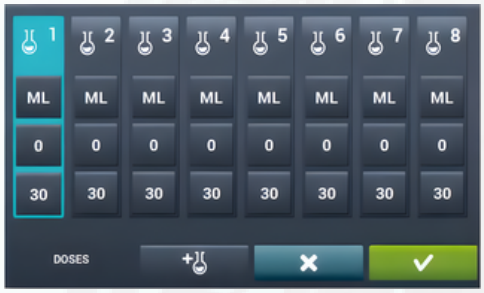

8 Dosing Signals as Standard
+Optional 6 Extra Dosing Signals

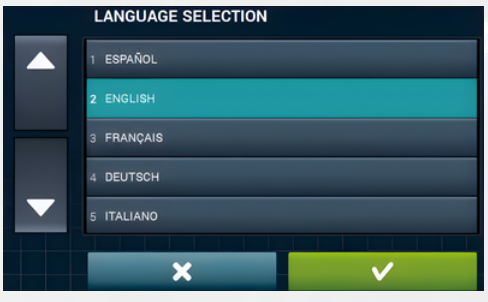

37 Launguages Accessible to everyone.

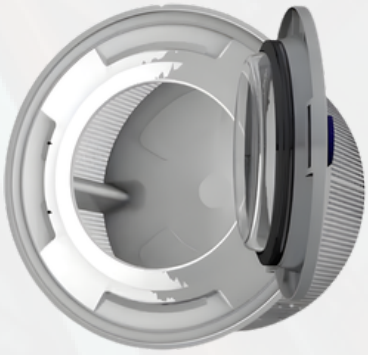

Easy Opening/closing System
Door Lock

DD SERIES 11-14-18-22-28 SILVER ET2
DATA SHEET

DRUM	Unit	DD-11 SILVER ET2		DD-14 SILVER ET2		DD-18 SILVER ET2		DD-22 SILVER ET2		DD-28 SILVER ET2	
Capacity 1/8	Kg	11,7		15		18,3		24,4		30,6	
	lb	25,7		33,1		40,4		53,9		67,3	
Capacity 1/20	Kg	10,5		13,5		16,5		22		27,5	
	lb	23,1		29,8		36,3		48,5		60,6	
Ø Drum	mm	750		750		750		835		947	
	inch	29,5		29,5		29,5		32,9		37,3	
Drum length	l	475		610		746		800		780	
	cu ft	18,7		24		29,4		31,5		30,7	
Drum volume	mm	210		270		330		440		550	
	inch	7,41		9,53		11,64		15,54		19,42	
Ø Door hole	mm	574		574		574		574		802	
	inch	22,6		22,6		22,6		22,6		31,6	
Door center height	mm	976		976		976		1.03		1.04	
	inch	38,4		38,4		38,4		40,6		40,9	
Height from floor to bottom of door	mm	618		618		618		672		578	
	inch	24,33		24,33		24,33		26,46		22,74	
ELECTRIC HEATING											
Evaporation capacity Hourly output	L/h	9,3		13,5		14,1		17		26,1	
	US gallon/h	2,46		3,57		3,72		4,49		6,89	
Hourly Output	Kg/h	20,3		26,9		28,3		34		48,4	
	lb/h	44,75		59,30		62,39		74,96		106,7	
Installed heating power	kW	12		18		18		24		30	
Installed electrical power	kW	12,67		18,67		18,67		24,97		31,15	
Drum motor power	kW	0,37		0,37		0,37		0,37		0,55	
GAS HEATING											
Evaporation capacity (gas model)	L/h	14,5		15,4		16,30		20		30,9	
	US gallon/h	3,83		4,07		4,31		5,28		8,16	
Hourly output (gas model)	Kg/h	28,60		30,25		31,90		40		59,30	
	lb/h	63,05		66,69		70,33		88,18		130,73	
Installed gas heating power	kcal/h	17727		17727		17727		26655		35254	
	Btu/h	69996		69996		69996		105776		139899	
Installed gas heating power	kW	20,5		20,5		20,5		31		41	
Installed electrical power	kW	0,67		0,67		0,67		0,97		1,15	
Instant propane gas consumption (G31)	Kg/h	1,76		1,76		1,76		2,66		3,51	
	lb/h	3,88		3,88		3,88		5,86		7,74	
Instant natural gas consumption (G20)	m³/h	2,17		2,17		2,17		3,28		4,34	
	cfm	1,28		1,28		1,28		1,93		2,55	
Ø Gas inlet	BSPP ISO 228-1	1/2"		1/2"		1/2"		1/2"		1/2"	
STEAM HEATING											
Installed steam heating power	kW	30		30		30		49,20		50,10	
	Btu/h	102364		102364		102364		167877		170948	
Installed electrical power	kW	0,67		0,67		0,67		0,97		1,15	
Steam consumption (8 barG) - Standard	kg/h	53		53		53		87		89	
Steam consumption (116 psiG)	lb/h	63,8		63,8		63,8		104,8		107,2	
Steam pressure	barG	06/09		06/09		06/09		06/09		06/09	
	psiG	87 - 130,5		87 - 130,5		87 - 130,5		87 - 130,5		87 - 130,5	
Standard steam inlet - outlet	BSPT- ISO7.1	3/4"		3/4"		3/4"		1"		1"	
Standard steam inlet - condensate outlet	NPT ANSI B1.20.1 Tapered	3/4"		3/4"		3/4"		1"		1"	
Steam consumption (5 barG) - Low Pressure	kg/h	57		57		57		-		93	
Steam consumption (72,5 psiG) - Low Pressure	lb/h	68,7		68,7		68,7		-		112	
Steam pressure (low pressure)	barG	03/06		03/06		03/06		03/06		03/06	
	psiG	43,5 - 87		43,5 - 89		43,5 - 91		43,5 - 93		43,5 - 95	
Low pressure steam inlet - outlet	BSPT- ISO7.1	1"		1"		1"		1"		1" 1/2	
VENTILATION											
Fan motor power	kW	0,25		0,25		0,25		0,55		0,55	
Nominal air flow rate	m³/h	850		850		850		1.2		1.2	
	cfm	500		500		500		706		706	
Ø Fume exhaust	mm	200		200		200		200		200	
Ø Fume exhaust	inch	7,87		7,87		7,87		7,87		7,87	
HEAT EMISSION											
Maximum total heat emission	kW	1,2		1,8		1,8		2,4		3	
	Btu/h	4097		6145		6145		8194		10242	
Max. front heat emission	kW	0,8		1,3		1,3		1,7		2,1	
	Btu/h	2868		4302		4302		5736		7170	
CONNECTIONS		E	G/S	E	G/S	E	G/S	E	G/S	E	G/S
Tension 230V - I + N + T	N° x mm² / A	3 x 25 / 63A	3 x 1,5 / 16A	-	3 x 1,5 / 16A	-	3 x 1,5 / 16A	-	3 x 1,5 / 16A	-	3 x 1,5 / 16A
Tension 230V - III + T	N° x mm² / A	4 x 10 / 40A	3 x 1,5 / 16A	4 x 16 / 63A	3 x 1,5 / 16A	4 x 16 / 63A	3 x 1,5 / 16A	4 x 25 / 80A	3 x 1,5 / 16A	4 x 35 / 100A	3 x 1,5 / 16A
Tension 400V - III + N + T	N° x mm² / A	5 x 4 / 25A	3 x 1,5 / 16A	5 x 10 / 32A	3 x 1,5 / 16A	5 x 10 / 32A	3 x 1,5 / 16A	5 x 10 / 40A	3 x 1,5 / 16A	5 x 16 / 63A	3 x 1,5 / 16A
NET DIMENSIONS / PACKING DIMENSIONS											
Net / gross width	mm	785 / 865		785 / 865		785 / 865		890 / 970		985 / 1.065	
	inch	30,9 / 34,1		30,9 / 34,1		30,9 / 34,1		35 / 38,2		38,8 / 41,9	
Net / gross depth	mm	855 / 940		989 / 1.074		1.125 / 1.210		1.255 / 1.345		1.054 / 1.154	
	inch	33,7 / 37		38,9 / 42,3		44,3 / 47,6		49,4 / 53		41,5 / 45,4	
Net height / gross height	mm	1.694 / 1.840		1.694 / 1.840		1.694 / 1.840		1.812 / 1.940		1.975 / 2.080	
	inch	66,7 / 72,4		66,7 / 72,4		66,7 / 72,4		71,3 / 76,4		77,8 / 81,9	
Net / gross weight	Kg	172 / 180		180 / 190		187 / 200		210 / 230		230 / 260	
	lb	379 / 397		397 / 419		412 / 441		463 / 507		507 / 573	
OTHERS											
Sound level	dB	64		64		64		65		65	

SILVER TUMBLE DRYERS
DD SERIES 35-45-60-80 ET2
DANUBE

The **DD-SILVER ET2** range of offers a wide choice of capacities from **35 to 80 kg** for greater versatility, Designed for efficiency, these dryers deliver significant energy savings.

MODELS
1. DD-35 SILVER
2. DD-45 SILVER
3. DD-60 SILVER
4. DD-80 SILVER



EASY TOUCH 2
- User friendly and totally programmable 7" ET2
- Online platform freeof chargefor programming, telemetry, data analysis Videos ondisplay (ads, instructions, etc.)
- Videosdisplay (ads, instructions...)
- 37 available languages.

EFFICIENCY
- **DOUBLE FLOW** - mixed axial-radial air flow
- Big fluff filter as drawer
- **Reversing drum action** as standard
- **Stainless steel drum** as standard
- **Frequency inverter** as standard

VERSATILITY
- Make to order - customization
- WET CLEANING
- OPL>Multi vending - Standard OPL model easily trasformable to coin laundry uses.

CONNECTIVITY
- Danube Online communication - IoT as standard
- Remote technical service.
- Management of laundries.

ERGONOMICS
- Drawer as fluff filter, stainless steel mesh
- Big door diameters
- Opening sense of door adjustable on site.

MAINTENANCE
- Hinged control panel: Easy and ergonomic access.
- Technical menu: statistics, data Recovery for after-sales service, software updates, etc.
- Easy access to components

OTHERS
- Grey skinplate outer casing, stainless steel look.
- NEW : transmission by gear motor on models DD-45 to 80.
- SOFT DRY - new drum with stamped holes.
- COOL DOWN - anti-wrinkle at the end of the cycle.
- Electric, gas or steam heating.
- CE approved.

FEATURES

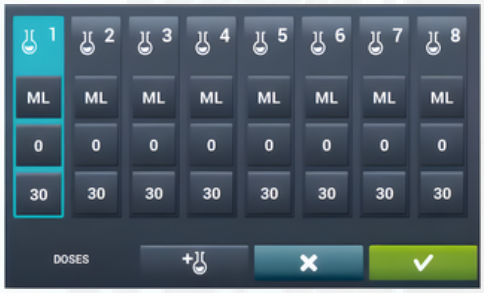

8 Dosing Signals as Standard
+Optional 6 Extra Dosing Signals

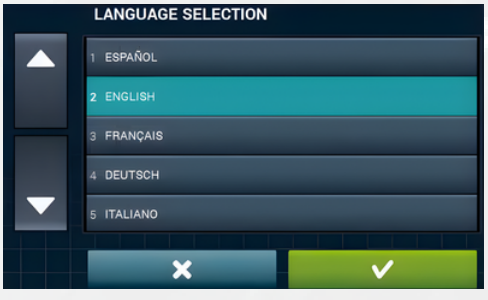

37 Launguages Accessible to everyone.



Easy Opening/closing System
Door Lock

DD SERIES 35-45-60-80 SILVER ET2
DATA SHEET

DRUM	Unit	DD-35 SILVER ET2	DD-45 SILVER ET2	DD-60 SILVER ET2	DD-80 SILVER ET2
Capacity 1/8	Kg	36,7	50	66,7	83,3
	lb	80,8	110,2	146,9	183,6
Capacity 1/20	Kg	33	45	60	75
	lb	72,8	99,2	132,3	165,3
Ø Drum	mm	947	1.225	1.225	1.225
	inch	37,3	48,2	48,2	48,2
Drum length	l	936	760	1.02	1.252
	cu ft	36,9	29,9	40,2	49,3
Drum volume	mm	660	900	1.2	1.5
	inch	23,30	31,78	42,37	52,95
Ø Door hole	mm	802	802	802	802
	inch	31,6	31,6	31,6	31,6
Door center height	mm	1.04	1.275	1.275	1.275
	inch	40,9	50,2	50,2	50,2
Height from floor to bottom of door	mm	578	813	813	813
	inch	22,74	31,99	31,99	31,99
ELECTRIC HEATING					
Evaporation capacity Hourly output	L/h	31,1	40,2	60,2	64
	US gallon/h	8,22	10,62	19,90	16,91
Hourly Output	Kg/h	60	80,4	120	128,6
	lb/h	132,28	177,25	264,55	283,51
Installed heating power	kW	36	54	72	72
Installed electrical power	kW	37,15	55,90	74,25	74,65
Drum motor power	kW	0,55	0,75	1,10	1,50
GAS HEATING					
Evaporation capacity (gas model)	L/h	32,1	42,5	65,8	86,5
	US gallon/h	8,48	11,23	17,38	22,85
Hourly output (gas model)	Kg/h	63,90	84,40	128,60	173,10
	lb/h	140,87	186,07	283,51	381,62
Installed gas heating power	kcal/h	35254	51591	77386	103181
	Btu/h	139899	204728	307093	409457
Installed gas heating power	kW	41	60	90	120
Installed electrical power	kW	1,15	1,90	2,25	2,65
Instant propane gas consumption (G31)	Kg/h	3,51	5,14	7,71	10,28
	lb/h	7,74	11,33	17	22,66
Instant natural gas consumption (G20)	m³/h	4,34	6,35	9,53	12,71
	cfm	2,55	3,74	5,61	7,48
Ø Gas inlet	BSPP ISO 228-1	1/2"	3/4"	3/4"	3/4"
STEAM HEATING					
Installed steam heating power	kW	50,1	91	128	128
	Btu/h	170948	310505	436754	436754
Installed electrical power	kW	1,15	1,90	2,25	2,65
Steam consumption (8 barG) - Standard	kg/h	89	121	171	171
Steam consumption (116 psiG)	lb/h	107,2	145,8	206	206
Steam pressure	barG	06/09	07/12	07/12	07/12
	psiG	87 - 130,5	101,5 - 174	101,5 - 174	101,5 - 174
Standard steam inlet - outlet	BSPT- ISO7.1	1"	1"	1"	1"
Standard steam inlet - condensate outlet	NPT ANSI B1.20.1 Tapered	1"	1"	1"	1"
Steam consumption (5 barG) - Low Pressure	kg/h	93	142	147	147
Steam consumption (72,5 psiG) - Low Pressure	lb/h	112	171,1	177,1	177,1
Steam pressure (low pressure)	barG	03/06	04/07	04/07	04/07
	psiG	43,5 - 97	58 - 101,5	58 - 101,5	58 - 101,5
Low pressure steam inlet - outlet	BSPT- ISO7.1	1" 1/2	1" 1/2	1" 1/2	1" 1/2
VENTILATION					
Fan motor power	kW	0,55	1,10	1,10	1,10
Nominal air flow rate	m³/h	1.2	3	3	3
	cfm	706	1766	1766	1766
Ø Fume exhaust	mm	200	300	300	300
Ø Fume exhaust	inch	7,87	11,81	11,81	11,81
HEAT EMISSION					
Maximum total heat emission	kW	3,6	4,9	6,5	6,5
	Btu/h	12291	16593	22124	22124
Max. front heat emission	kW	2,5	2,2	2,9	2,9
	Btu/h	8604	7375	9833	9833
CONNECTIONS		E G/S	E G/S	E G/S	E G/S
Tension 230V - I + N + T	N° x mm² / A	- 3 x 1,5 / 16A	- -	- -	- -
Tension 230V - III + T	N° x mm² / A	4 x 50 / 125A 3 x 1,5 / 16A	- 4 x 2,5 / 20A	- 4 x 2,5 / 25A	- 4 x 2,5 / 25A
Tension 400V - III + N + T	N° x mm² / A	5 x 16 / 63A 3 x 1,5 / 16A	5 x 35 / 100A 5 x 2,5 / 20A	5 x 50 / 125A 5 x 2,5 / 25A	5 x 50 / 125A 5 x 2,5 / 25A
NET DIMENSIONS / PACKING DIMENSIONS					
Net / gross width	mm	985 / 1.065	1.270 / 1.330	1.270 / 1.330	1.270 / 1.330
	inch	38,8 / 41,9	50 / 52,4	50 / 52,4	50 / 52,4
Net / gross depth	mm	1.210 / 1.310	1.106 / 1.185*	1.366 / 1.455	1.598 / 1.705
	inch	47,6 / 51,6	43,5 / 46,6*	53,8 / 57,3	62,9 / 67,1
Net height / gross height	mm	1.975 / 2.080	2.380 / 2.200	2.380 / 2.200	2.380 / 2.200
	inch	77,8 / 81,9	93,7 / 86,6	93,7 / 86,6	93,7 / 86,6
Net / gross weight	Kg	260 / 285	395 / 430	529 / 575	657 / 715
	lb	573 / 628	871 / 948	1.166 / 1.268	1.448 / 1.576
OTHERS					
Sound level	dB	65	67	67	67

BRONZE TUMBLE DRYERS
DD SERIES 11-14-18-22-28 EM
DANUBE

The **DD-BRONZE EM** range offers the same standard features and capabilities as the SILVER range, except that it is controlled by the simpler EM electronic programmer, with push-buttons for selecting temperature and time.

MODELS
1. DD-11 BRONZE
2. DD-14 BRONZE
3. DD-18 BRONZE
4. DD-22 BRONZE
5. DD-28 BRONZE

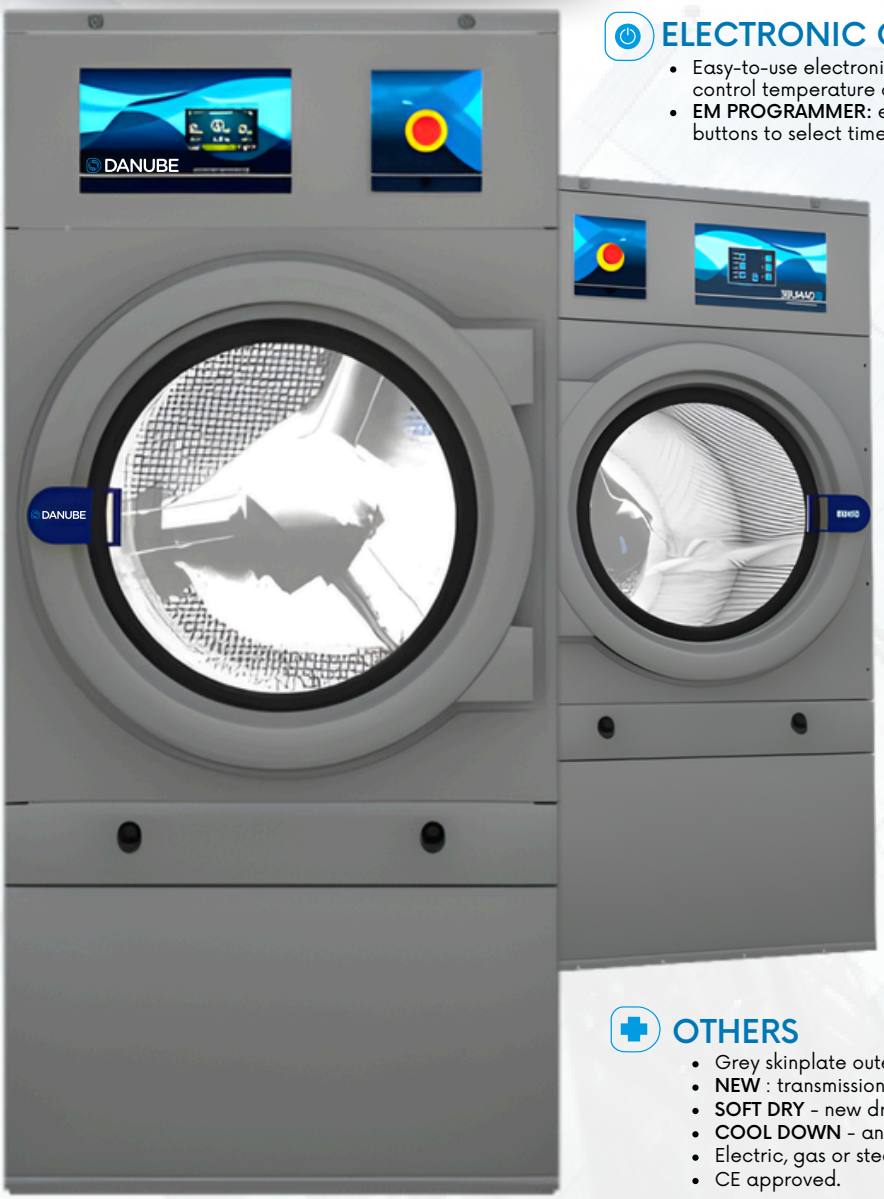

ELECTRONIC CONTROL
- Easy-to-use electronic control with push buttons to control temperature and time.
- **EM PROGRAMMER**: electronic control with push buttons to select time and temperature.

FEATURES
- **REVERSING DRUM** action as standard.
- **STAINLESS STELL DRUM** as standard.
- Frequency inverter as standard.

EFFICIENCY
- **DOUBLE FLOW** - mixed axial-radial airflow.
- Big fluff filter as drawer.
- Back panel with air filter
- Lint filter with grid 0,6 or 1,2 mm (standard is 0,3 mm)

VERSATILITY
- Make to order - customization
- **OPL** > Multi-vending - Standard OPL model easily trasform able to coin laundry uses.

ERGONOMICS
- Drawer as fluff filter, stainless steel mesh.
- Big door diameters
- Opening sense of door adjustable on site.

MAINTENANCE
- Hinged control panel: Easy and ergonomic access.
- Technical menu: statistics, data Recovery for after-sales service, software updates, etc.
- Easy access to components

OTHERS
- Grey skinplate outer casing, stainless steel look.
- **NEW** : transmission by gear motor on models DD-45 to 80.
- **SOFT DRY** - new drum with stamped holes.
- **COOL DOWN** - anti-wrinkle at the end of the cycle.
- Electric, gas or steam heating.
- CE approved.

FEATURES

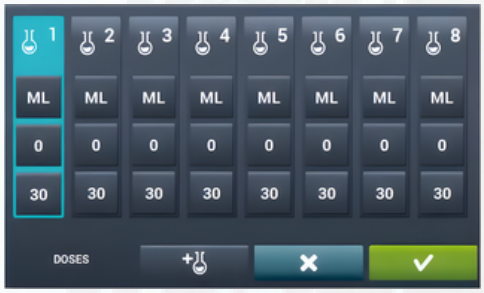

8 Dosing Signals as Standard
+Optional 6 Extra Dosing Signals

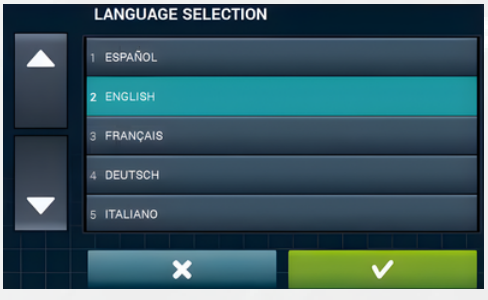

37 Launguages Accessible to everyone.

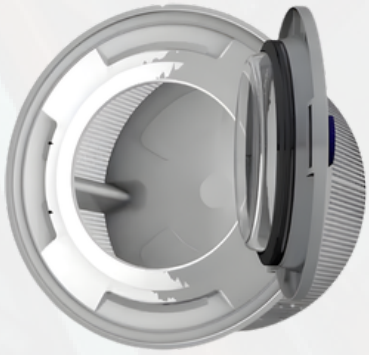

DD SERIES 11-14-18-22-28 BRONZE EM
DATA SHEET

DRUM	Unit	DD-11 BRONZE EM	DD-14 BRONZE EM	DD-18 BRONZE EM	DD-22 BRONZE EM	DD-28 BRONZE EM
Capacity 1/8	Kg	11,7	15	18,3	24,4	30,6
	lb	25,7	33,1	40,4	53,9	67,3
Capacity 1/20	Kg	10,5	13,5	16,5	22	27,5
	lb	23,1	29,8	36,3	48,5	60,6
Ø Drum	mm	750	750	750	835	947
	inch	29,5	29,5	29,5	32,9	37,3
Drum length	l	475	610	746	800	780
	cu ft	18,7	24	29,4	31,5	30,7
Drum volume	mm	210	270	330	440	550
	inch	7,41	9,53	11,64	15,54	19,42
Ø Door hole	mm	574	574	574	574	802
	inch	22,6	22,6	22,6	22,6	31,6
Door center height	mm	976	976	976	1.03	1.04
	inch	38,4	38,4	38,4	40,6	40,9
Height from floor to bottom of door	mm	618	618	618	672	578
	inch	24,33	24,33	24,33	26,46	22,74
ELECTRIC HEATING						
Evaporation capacity Hourly output	L/h	9,3	13,5	14,1	17	26,1
	US gallon/h	2,46	3,57	3,72	4,49	6,89
Hourly Output	Kg/h	20,3	26,9	28,3	34	48,4
	lb/h	44,75	59,30	62,39	74,96	106,7
Installed heating power	kW	12	18	18	24	30
Installed electrical power	kW	12,67	18,67	18,67	24,97	31,15
Drum motor power	kW	0,37	0,37	0,37	0,37	0,55
GAS HEATING						
Evaporation capacity (gas model)	L/h	14,5	15,4	16,30	20	30,9
	US gallon/h	3,83	4,07	4,31	5,28	8,16
Hourly output (gas model)	Kg/h	28,60	30,25	31,90	40	59,30
	lb/h	63,05	66,69	70,33	88,18	130,73
Installed gas heating power	kcal/h	17727	17727	17727	26655	35254
	Btu/h	69996	69996	69996	105776	139899
Installed gas heating power	kW	20,5	20,5	20,5	31	41
Installed electrical power	kW	0,67	0,67	0,67	0,97	1,15
Instant propane gas consumption (G31)	Kg/h	1,76	1,76	1,76	2,66	3,51
	lb/h	3,88	3,88	3,88	5,86	7,74
Instant natural gas consumption (G20)	m³/h	2,17	2,17	2,17	3,28	4,34
	cfm	1,28	1,28	1,28	1,93	2,55
Ø Gas inlet	BSPP ISO 228-1	1/2"	1/2"	1/2"	1/2"	1/2"
STEAM HEATING						
Installed steam heating power	kW	30	30	30	49,20	50,10
	Btu/h	102364	102364	102364	167877	170948
Installed electrical power	kW	0,67	0,67	0,67	0,97	1,15
Steam consumption (8 barG) - Standard	kg/h	53	53	53	87	89
Steam consumption (116 psiG)	lb/h	63,8	63,8	63,8	104,8	107,2
Steam pressure	barG	06/09	06/09	06/09	06/09	06/09
	psiG	87 - 130,5	87 - 130,5	87 - 130,5	87 - 130,5	87 - 130,5
Standard steam inlet - outlet	BSPT- ISO7.1	3/4"	3/4"	3/4"	1"	1"
Standard steam inlet - condensate outlet	NPT ANSI B1.20.1 Tapered	3/4"	3/4"	3/4"	1"	1"
Steam consumption (5 barG) - Low Pressure	kg/h	57	57	57	-	93
Steam consumption (72,5 psiG) - Low Pressure	lb/h	68,7	68,7	68,7	-	112
Steam pressure (low pressure)	barG	03/06	03/06	03/06	03/06	03/06
	psiG	43,5 - 87	43,5 - 89	43,5 - 91	43,5 - 93	43,5 - 95
Low pressure steam inlet - outlet	BSPT- ISO7.1	1"	1"	1"	1"	1" 1/2
VENTILATION						
Fan motor power	kW	0,25	0,25	0,25	0,55	0,55
Nominal air flow rate	m³/h	850	850	850	1.2	1.2
	cfm	500	500	500	706	706
Ø Fume exhaust	mm	200	200	200	200	200
Ø Fume exhaust	inch	7,87	7,87	7,87	7,87	7,87
HEAT EMISSION						
Maximum total heat emission	kW	1,2	1,8	1,8	2,4	3
	Btu/h	4097	6145	6145	8194	10242
Max. front heat emission	kW	0,8	1,3	1,3	1,7	2,1
	Btu/h	2868	4302	4302	5736	7170
CONNECTIONS		E / G/S	E / G/S	E / G/S	E / G/S	E / G/S
Tension 230V - I + N + T	N° x mm² / A	3 x 25 / 63A / 3 x 1,5 / 16A	- / 3 x 1,5 / 16A	- / 3 x 1,5 / 16A	- / 3 x 1,5 / 16A	- / 3 x 1,5 / 16A
Tension 230V - III + T	N° x mm² / A	4 x 10 / 40A / 3 x 1,5 / 16A	4 x 16 / 63A / 3 x 1,5 / 16A	4 x 16 / 63A / 3 x 1,5 / 16A	4 x 25 / 80A / 3 x 1,5 / 16A	4 x 35 / 100A / 3 x 1,5 / 16A
Tension 400V - III + N + T	N° x mm² / A	5 x 4 / 25A / 3 x 1,5 / 16A	5 x 10 / 32A / 3 x 1,5 / 16A	5 x 10 / 32A / 3 x 1,5 / 16A	5 x 10 / 40A / 3 x 1,5 / 16A	5 x 16 / 63A / 3 x 1,5 / 16A
NET DIMENSIONS / PACKING DIMENSIONS						
Net / gross width	mm	785 / 865	785 / 865	785 / 865	890 / 970	985 / 1.065
	inch	30,9 / 34,1	30,9 / 34,1	30,9 / 34,1	35 / 38,2	38,8 / 41,9
Net / gross depth	mm	855 / 940	989 / 1.074	1.125 / 1.210	1.255 / 1.345	1.054 / 1.154
	inch	33,7 / 37	38,9 / 42,3	44,3 / 47,6	49,4 / 53	41,5 / 45,4
Net height / gross height	mm	1.694 / 1.840	1.694 / 1.840	1.694 / 1.840	1.812 / 1.940	1.975 / 2.080
	inch	66,7 / 72,4	66,7 / 72,4	66,7 / 72,4	71,3 / 76,4	77,8 / 81,9
Net / gross weight	Kg	172 / 180	180 / 190	187 / 200	210 / 230	230 / 260
	lb	379 / 397	397 / 419	412 / 441	463 / 507	507 / 573
OTHERS						
Sound level	dB	64	64	64	65	65

BRONZE TUMBLE DRYERS
DD SERIES 35-45-60-80 EM
DANUBE

The **DD-BRONZE EM** range offers the same standard features and capabilities as the SILVER range, except that it is controlled by the simpler EM electronic programmer, with push-buttons for selecting temperature and time.

MODELS
1. DD-35 BRONZE
2. DD-45 BRONZE
3. DD-60 BRONZE
4. DD-80 BRONZE

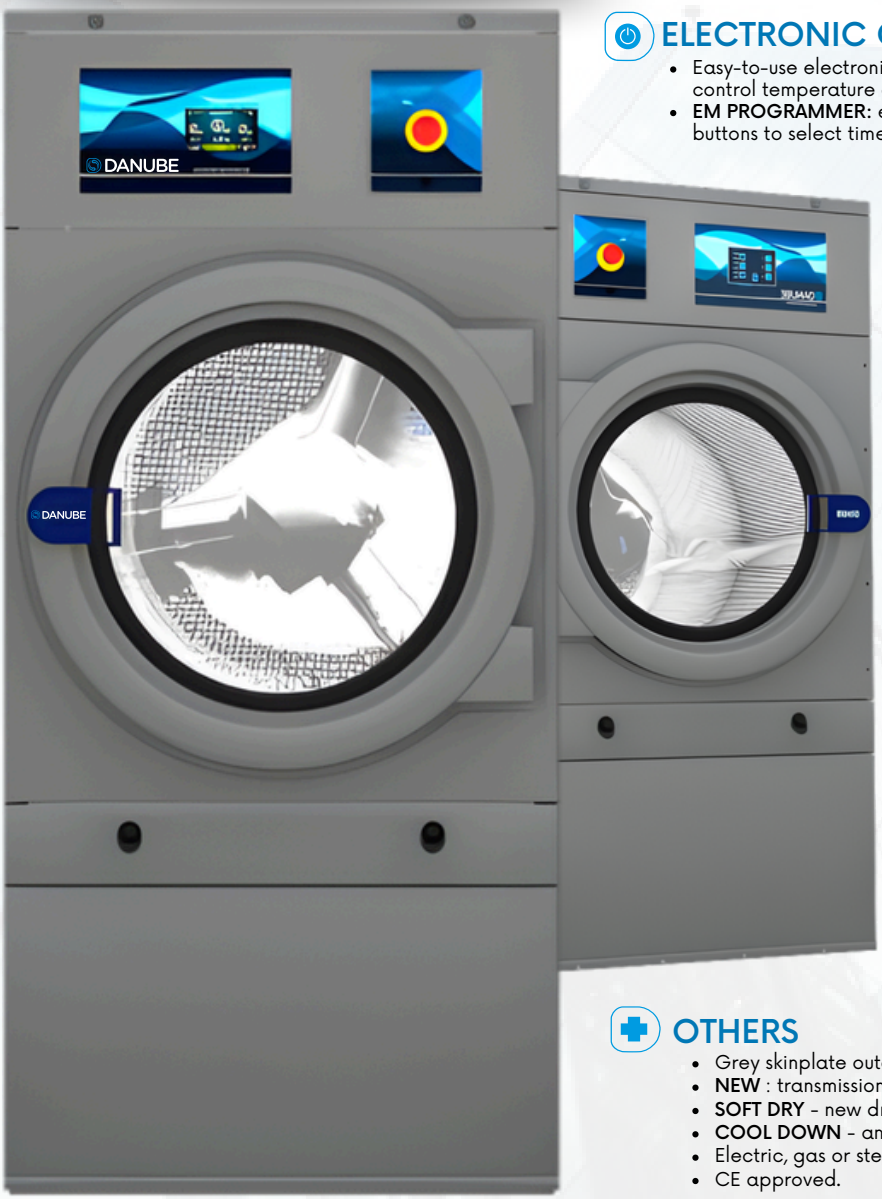

ELECTRONIC CONTROL
- Easy-to-use electronic control with push buttons to control temperature and time.
- **EM PROGRAMMER**: electronic control with push buttons to select time and temperature.

FEATURES
- **REVERSING DRUM** action as standard.
- **STAINLESS STELL DRUM** as standard.
- Frequency inverter as standard.

EFFICIENCY
- **DOUBLE FLOW** - mixed axial-radial airflow.
- Big fluff filter as drawer.
- Back panel with air filter
- Lint filter with grid 0,6 or 1,2 mm (standard is 0,3 mm)

VERSATILITY
- Make to order - customization
- **OPL** > Multi-vending - Standard OPL model easily trasform able to coin laundry uses.

ERGONOMICS
- Drawer as fluff filter, stainless steel mesh.
- Big door diameters
- Opening sense of door adjustable on site.

MAINTENANCE
- Hinged control panel: Easy and ergonomic access.
- Technical menu: statistics, data Recovery for after-sales service, software updates, etc.
- Easy access to components

OTHERS
- Grey skinplate outer casing, stainless steel look.
- **NEW** : transmission by gear motor on models DD-45 to 80.
- **SOFT DRY** - new drum with stamped holes.
- **COOL DOWN** - anti-wrinkle at the end of the cycle.
- Electric, gas or steam heating.
- CE approved.

FEATURES

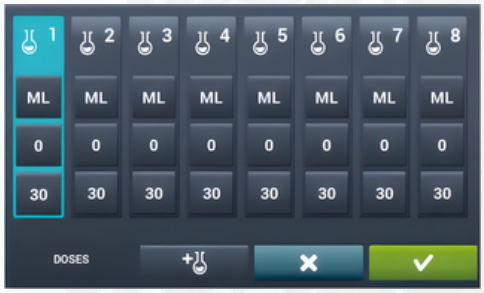

8 Dosing Signals as Standard
+Optional 6 Extra Dosing Signals

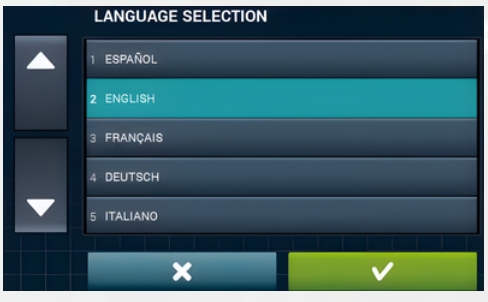

37 Launguages Accessible to everyone.



Easy Opening/closing System
Door Lock

DD SERIES 35-45-60-80 BRONZE EM
DATA SHEET

DRUM	Unit	DD-35 BRONZE EM	DD-45 BRONZE EM	DD-60 BRONZE EM	DD-80 BRONZE EM
Capacity 1/8	Kg	36,7	50	66,7	83,3
	lb	80,8	110,2	146,9	183,6
Capacity 1/20	Kg	33	45	60	75
	lb	72,8	99,2	132,3	165,3
Ø Drum	mm	947	1.225	1.225	1.225
	inch	37,3	48,2	48,2	48,2
Drum length	l	936	760	1.02	1.252
	cu ft	36,9	29,9	40,2	49,3
Drum volume	mm	660	900	1.2	1.5
	inch	23,30	31,78	42,37	52,95
Ø Door hole	mm	802	802	802	802
	inch	31,6	31,6	31,6	31,6
Door center height	mm	1.04	1.275	1.275	1.275
	inch	40,9	50,2	50,2	50,2
Height from floor to bottom of door	mm	578	813	813	813
	inch	22,74	31,99	31,99	31,99
ELECTRIC HEATING					
Evaporation capacity Hourly output	L/h	31,1	40,2	60,2	64
	US gallon/h	8,22	10,62	19,90	16,91
Hourly Output	Kg/h	60	80,4	120	128,6
	lb/h	132,28	177,25	264,55	283,51
Installed heating power	kW	36	54	72	72
Installed electrical power	kW	37,15	55,90	74,25	74,65
Drum motor power	kW	0,55	0,75	1,10	1,50
GAS HEATING					
Evaporation capacity (gas model)	L/h	32,1	42,5	65,8	86,5
	US gallon/h	8,48	11,23	17,38	22,85
Hourly output (gas model)	Kg/h	63,90	84,40	128,60	173,10
	lb/h	140,87	186,07	283,51	381,62
Installed gas heating power	kcal/h	35254	51591	77386	103181
	Btu/h	139899	204728	307093	409457
Installed gas heating power	kW	41	60	90	120
Installed electrical power	kW	1,15	1,90	2,25	2,65
Instant propane gas consumption (G31)	Kg/h	3,51	5,14	7,71	10,28
	lb/h	7,74	11,33	17	22,66
Instant natural gas consumption (G20)	m³/h	4,34	6,35	9,53	12,71
	cfm	2,55	3,74	5,61	7,48
Ø Gas inlet	BSPP ISO 228-1	1/2"	3/4"	3/4"	3/4"
STEAM HEATING					
Installed steam heating power	kW	50,1	91	128	128
	Btu/h	170948	310505	436754	436754
Installed electrical power	kW	1,15	1,90	2,25	2,65
Steam consumption (8 barG) - Standard	kg/h	89	121	171	171
Steam consumption (116 psiG)	lb/h	107,2	145,8	206	206
Steam pressure	barG	06/09	07/12	07/12	07/12
	psiG	87 - 130,5	101,5 - 174	101,5 - 174	101,5 - 174
Standard steam inlet - outlet	BSPT- ISO7.1	1"	1"	1"	1"
Standard steam inlet - condensate outlet	NPT ANSI B1.20.1 Tapered	1"	1"	1"	1"
Steam consumption (5 barG) - Low Pressure	kg/h	93	142	147	147
Steam consumption (72,5 psiG) - Low Pressure	lb/h	112	171,1	177,1	177,1
Steam pressure (low pressure)	barG	03/06	04/07	04/07	04/07
	psiG	43,5 - 97	58 - 101,5	58 - 101,5	58 - 101,5
Low pressure steam inlet - outlet	BSPT- ISO7.1	1" 1/2	1" 1/2	1" 1/2	1" 1/2
VENTILATION					
Fan motor power	kW	0,55	1,10	1,10	1,10
Nominal air flow rate	m³/h	1.2	3	3	3
	cfm	706	1766	1766	1766
Ø Fume exhaust	mm	200	300	300	300
Ø Fume exhaust	inch	7,87	11,81	11,81	11,81
HEAT EMISSION					
Maximum total heat emission	kW	3,6	4,9	6,5	6,5
	Btu/h	12291	16593	22124	22124
Max. front heat emission	kW	2,5	2,2	2,9	2,9
	Btu/h	8604	7375	9833	9833
CONNECTIONS		E / G/S	E / G/S	E / G/S	E / G/S
Tension 230V - I + N + T	N° x mm² / A	- / 3 x 1,5 / 16A	- / -	- / -	- / -
Tension 230V - III + T	N° x mm² / A	4 x 50 / 125A / 3 x 1,5 / 16A	- / 4 x 2,5 / 20A	- / 4 x 2,5 / 25A	- / 4 x 2,5 / 25A
Tension 400V - III + N + T	N° x mm² / A	5 x 16 / 63A / 3 x 1,5 / 16A	5 x 35 / 100A / 5 x 2,5 / 20A	5 x 50 / 125A / 5 x 2,5 / 25A	5 x 50 / 125A / 5 x 2,5 / 25A
NET DIMENSIONS / PACKING DIMENSIONS					
Net / gross width	mm	985 / 1.065	1.270 / 1.330	1.270 / 1.330	1.270 / 1.330
	inch	38,8 / 41,9	50 / 52,4	50 / 52,4	50 / 52,4
Net / gross depth	mm	1.210 / 1.310	1.106 / 1.185*	1.366 / 1.455	1.598 / 1.705
	inch	47,6 / 51,6	43,5 / 46,6*	53,8 / 57,3	62,9 / 67,1
Net height / gross height	mm	1.975 / 2.080	2.380 / 2.200	2.380 / 2.200	2.380 / 2.200
	inch	77,8 / 81,9	93,7 / 86,6	93,7 / 86,6	93,7 / 86,6
Net / gross weight	Kg	260 / 285	395 / 430	529 / 575	657 / 715
	lb	573 / 628	871 / 948	1.166 / 1.268	1.448 / 1.576
OTHERS					
Sound level	dB	65	67	67	67

BASIC TUMBLE DRYERS
DD SERIES 11-14-18-22-28-35 EM
DANUBE

The **DD BASIC range** is available from **11 to 35 kg.** It is fitted as standard with drum inversion, a frequency inverter and dual axial and radial airflow, and maintains the same level of performance and drying quality as the other ranges.

MODELS
1. DD-11 BASIC
2. DD-14 BASIC
3. DD-18 BASIC
4. DD-22 BASIC
5. DD-28 BASIC
6. DD-35 BASIC

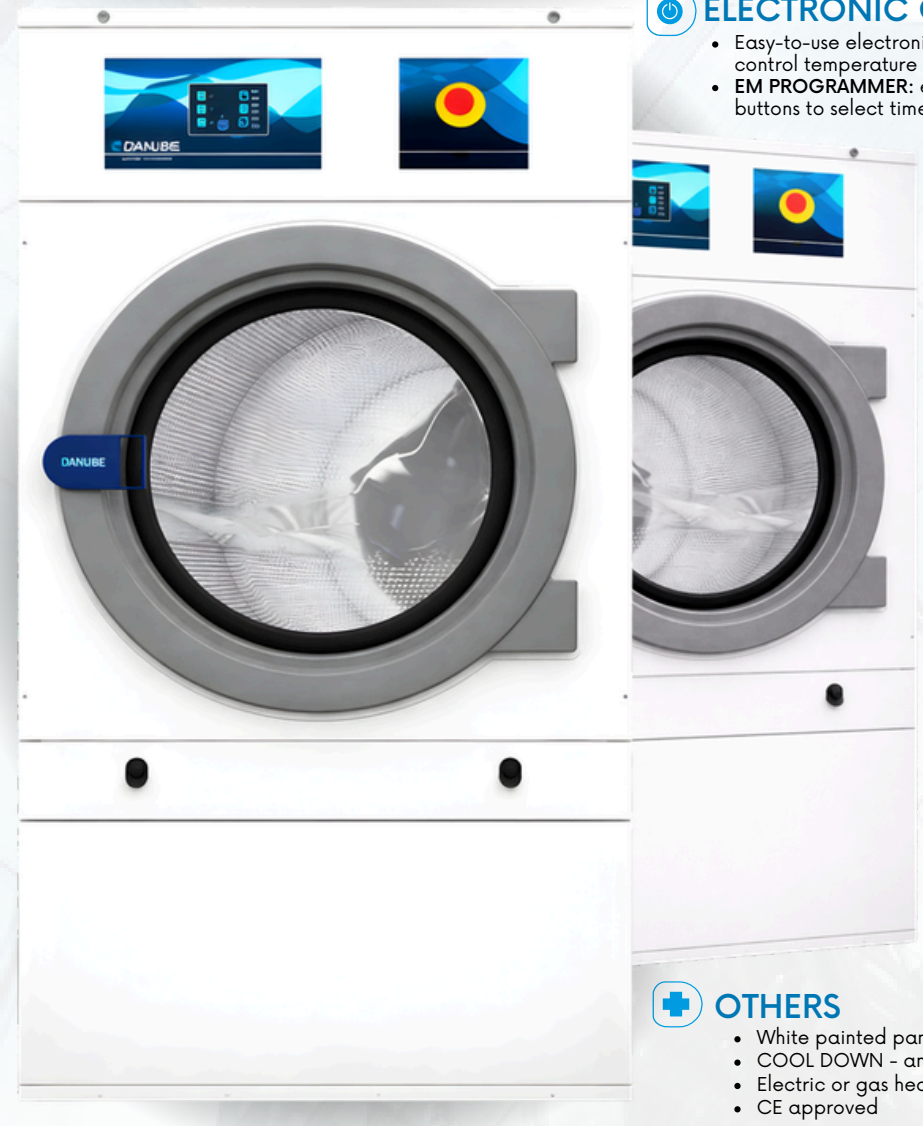

ELECTRONIC CONTROL
- Easy-to-use electronic control with push buttons to control temperature and time.
- **EM PROGRAMMER:** electronic control with push buttons to select time and temperature.

FEATURES
- **REVERSING DRUM** action as standard.
- **GALVANIZED DRUM** as standard
- Frequency inverter as standard

EFFICIENCY
- Big fluff filter as drawer.

VERSATILITY
- Make to order - customization
- **OPL** > Multi-vending - Standard OPL model easily trasform able to coin laundry uses.

ERGONOMICS
- Big door diameters
- Opening sense of door adjustable on site.

MAINTENANCE
- Hinged control panel: Easy and ergonomic access.
- Technical menu: statistics, data Recovery for after-sales service, software updates, etc.
- Easy access to components

OTHERS
- White painted panels
- COOL DOWN - anti-wrinkle at the end of the cycle.
- Electric or gas heating
- CE approved

FEATURES

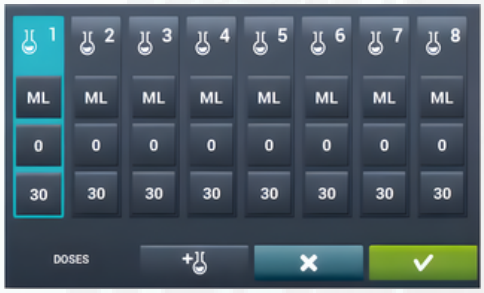

8 Dosing Signals as Standard
+Optional 6 Extra Dosing Signals

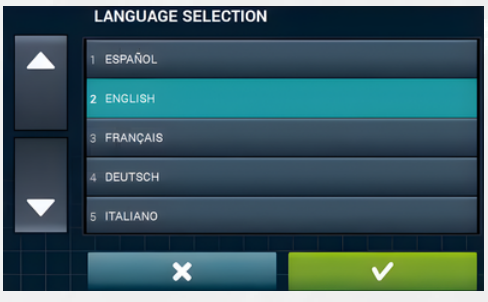

37 Laungauges Accessible to everyone.



Easy Opening/closing System
Door Lock

DD SERIES 11-14-18-22-28-35 BASIC EM
DATA SHEET

DRUM	Unit	DD-11 BASIC EM	DD-14 BASIC EM	DD-18 BASIC EM	DD-22 BASIC EM	DD-28 BASIC EM	DD-35 BASIC EM
Capacity 1/8	Kg	11,7	15	18,3	24,4	30,6	36,7
	lb	25,7	33,1	40,4	53,9	67,3	80,8
Capacity 1/20	Kg	10,5	13,5	16,5	22	27,5	33
	lb	23,1	29,8	36,3	48,5	60,6	72,8
Ø Drum	mm	750	750	750	835	947	947
	inch	29,5	29,5	29,5	32,9	37,3	37,3
Drum length	l	475	610	746	800	780	936
	cu ft	18,7	24	29,4	31,5	30,7	36,9
Drum volume	mm	210	270	330	440	550	660
	inch	7,41	9,53	11,64	15,54	19,42	23,30
Ø Door hole	mm	574	574	574	574	802	802
	inch	22,6	22,6	22,6	22,6	31,6	31,6
Door center height	mm	976	976	976	1.03	1.04	1.04
	inch	38,4	38,4	38,4	40,6	40,9	40,9
Height from floor to bottom of door	mm	618	618	618	672	578	578
	inch	24,33	24,33	24,33	26,46	22,74	22,74
ELECTRIC HEATING							
Evaporation capacity Hourly output	L/h	9,3	13,5	14,1	17	26,1	31,1
	US gallon/h	2,46	3,57	3,72	4,49	6,89	8,22
Hourly Output	Kg/h	20,3	26,9	28,3	34	48,4	60
	lb/h	44,75	59,30	62,39	74,96	106,7	132,28
Installed heating power	kW	12	18	18	24	30	36
Installed electrical power	kW	12,67	18,67	18,67	24,97	31,15	37,15
Drum motor power	kW	0,37	0,37	0,37	0,37	0,55	0,55
GAS HEATING							
Evaporation capacity (gas model)	L/h	14,5	15,4	16,30	20	30,9	32,1
	US gallon/h	3,83	4,07	4,31	5,28	8,16	8,48
Hourly output (gas model)	Kg/h	28,60	30,25	31,90	40	59,30	63,90
	lb/h	63,05	66,69	70,33	88,18	130,73	140,87
Installed gas heating power	kcal/h	17727	17727	17727	26655	35254	35254
	Btu/h	69996	69996	69996	105776	139899	139899
Installed gas heating power	kW	20,5	20,5	20,5	31	41	41
Installed electrical power	kW	0,67	0,67	0,67	0,97	1,15	1,15
Instant propane gas consumption (G31)	Kg/h	1,76	1,76	1,76	2,66	3,51	3,51
	lb/h	3,88	3,88	3,88	5,86	7,74	7,74
Instant natural gas consumption (G20)	m³/h	2,17	2,17	2,17	3,28	4,34	4,34
	cfm	1,28	1,28	1,28	1,93	2,55	2,55
Ø Gas inlet	BSPP ISO 228-1	1/2"	1/2"	1/2"	1/2"	1/2"	1/2"
VENTILATION							
Fan motor power	kW	0,25	0,25	0,25	0,55	0,55	0,55
Nominal air flow rate	m³/h	850	850	850	1.2	1.2	1.2
	cfm	500	500	500	706	706	706
Ø Fume exhaust	mm	200	200	200	200	200	200
Ø Fume exhaust	inch	7,87	7,87	7,87	7,87	7,87	7,87
HEAT EMISSION							
Maximum total heat emission	kW	1,2	1,8	1,8	2,4	3	3,6
	Btu/h	4097	6145	6145	8194	10242	12291
Max. front heat emission	kW	0,8	1,3	1,3	1,7	2,1	2,5
	Btu/h	2868	4302	4302	5736	7170	8604
CONNECTIONS		E / G/S	E / G/S	E / G/S	E / G/S	E / G/S	E / G/S
Tension 230V - I + N + T	N° x mm² / A	3 x 25 / 63A / 3 x 1,5 / 16A	- / 3 x 1,5 / 16A	- / 3 x 1,5 / 16A	- / 3 x 1,5 / 16A	- / 3 x 1,5 / 16A	- / 3 x 1,5 / 16A
Tension 230V - III + T	N° x mm² / A	4 x 10 / 40A / 3 x 1,5 / 16A	4 x 16 / 63A / 3 x 1,5 / 16A	4 x 16 / 63A / 3 x 1,5 / 16A	4 x 25 / 80A / 3 x 1,5 / 16A	4 x 35 / 100A / 3 x 1,5 / 16A	4 x 50 / 125A / 3 x 1,5 / 16A
Tension 400V - III + N + T	N° x mm² / A	5 x 4 / 25A / 3 x 1,5 / 16A	5 x 10 / 32A / 3 x 1,5 / 16A	5 x 10 / 32A / 3 x 1,5 / 16A	5 x 10 / 40A / 3 x 1,5 / 16A	5 x 16 / 63A / 3 x 1,5 / 16A	5 x 16 / 63A / 3 x 1,5 / 16A
NET DIMENSIONS / PACKING DIMENSIONS							
Net / gross width	mm	785 / 865	785 / 865	785 / 865	890 / 970	985 / 1.065	985 / 1.065
	inch	30,9 / 34,1	30,9 / 34,1	30,9 / 34,1	35 / 38,2	38,8 / 41,9	38,8 / 41,9
Net / gross depth	mm	855 / 940	989 / 1.074	1.125 / 1.210	1.255 / 1.345	1.054 / 1.154	1.210 / 1.310
	inch	33,7 / 37	38,9 / 42,3	44,3 / 47,6	49,4 / 53	41,5 / 45,4	47,6 / 51,6
Net height / gross height	mm	1.694 / 1.840	1.694 / 1.840	1.694 / 1.840	1.812 / 1.940	1.975 / 2.080	1.975 / 2.080
	inch	66,7 / 72,4	66,7 / 72,4	66,7 / 72,4	71,3 / 76,4	77,8 / 81,9	77,8 / 81,9
Net / gross weight	Kg	172 / 180	180 / 190	187 / 200	210 / 230	230 / 260	260 / 285
	lb	379 / 397	397 / 419	412 / 441	463 / 507	507 / 573	573 / 628
OTHERS							
Sound level	dB	64	64	64	65	65	65

HIGH SPIN GOLD DRYERS
DD-11-16-23 HP GOLD ET2
DANUBE

HP-GOLD heat pump dryers are ideal for installation in areas with no access to the outdoors. Equipped as standard with efficient features, this range optimises energy consumption while reducing its impact on the environment.

MODELS
1. WED-11 ET2
2. WED-14 ET2
3. WED-18 ET2
4. WED-22 ET2
5. WED-28 ET2



EASY TOUCH 2
- User friendly and totally programmable with 7" coloured touch screen.
- USB Connection. PC software free of charge for programming, telemetry, data analysis, etc.
- Videos on display (ads, instructions, etc.)
- 37 languages.

G FACTOR
- Reversing drum as standard.
- Stainless steel drum as standard.
- Frequency inverter as standard.

EFFICIENCY
- DOUBLE AIRFLOW - mixed axial-radial airflow
- CAREDRY: humidity control.
- Bigfluff filter.
- Double door glass.

VERSATILITY
- Make to order - customization
- WET CLEANING
- OPL > Multi vending - StandardOPL model easily transformable to coin laundry uses.

CONNECTIVITY
- Danube Online communication - IoT
- Remote payment (coin laundry), remote technical service.
- Management of laundries:OPL and COIN

ERGONOMICS
- Drawer as fluff filter, made of stainless steel.
- Biggest door diameters.
- Opening sense of door adjustable on site.
- Hinged panel: easy and ergonomic access.

MAINTENANCE
- Grey skin plate outer casing, stainless steel look.
- SOFT DRY - drum with stamped holes.
- COOL DOWN - anti-wrinkle at the end of the cycle.
- No need of exhaust to the exterior.
- Low energy consumption.
- Water to refrigerate, which may be reused to wash.
- CE approved.

OTHERS
- 230V 3~ 50 Hz HP
- 230V 3~ 60 Hz HP
- RD Opposite door opening 11-23 HP
- SSC Stainless steel outer casing HP-11.

FEATURES

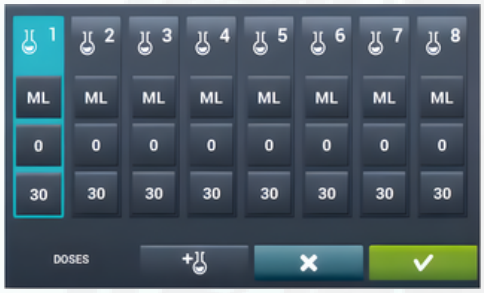

8 Dosing Signals as Standard
+Optional 6 Extra Dosing Signals

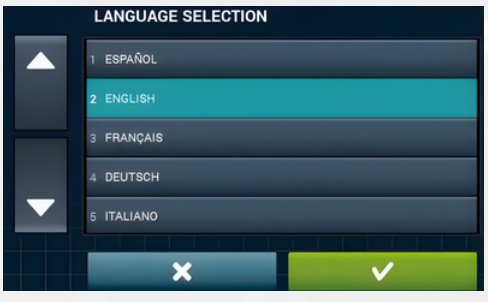

37 Laungauges Accessible to everyone.



Easy Opening/closing System
Door Lock

DD SERIES 11-16-23 HP GOLD ET2
DATA SHEET

TECHNICALDATA	Unit	DD-11 HP GOLD ET2	DD-16 HP GOLD ET2	DD-23 HP GOLD ET2
Capacity 1/8	Kg	12	18	26
Capacity 1/20	Kg	11	17	23
Capacity 1/30	Kg	7	11	15
Hourly Output*	Kg/h	15	18,9	22,9
Evaporation Capacity*	l/h	7,5	9,5	11,5
DRUM				
Ø Drum	mm	750	750	855
Drum length	mm	475	746	800
Drum volume	l	210	330	460
Ø Loading door	mm	574	574	574
POWER				
Drum motor power	KW	0,37	0,37	0,37
Fan motor power	KW	0,55	0,55	0,55
Electric heating power	KW	3,8 + 4***	3,8 + 4***	3,8 + 4***
Total heating power	KW	8,77	8,77	8,77
Electric consumption	kWh/l	1,28**	1,17**	1,05**
Nominal airflow	m3/h	1.2	1.2	1.2
CONNECTIONS				
Tension 400V - III + N + T (50 Hz)	N° x mm² / A	5 x 4 / 20	5 x 4 / 20	5 x 4 / 20
Heat pump inlet (Cooling)	BSP	1/2"	1/2"	1/2"
Heat pump outlet (cooling)	BSP	1/2"	1/2"	1/2"
Drain	BSP	3/4"	3/4"	3/4"
DIMENSIONS / PACKING DIMENSIONS				
Net Width / gross width	mm	785 / 865	785 / 865	890 / 970
Net Depth / gross depth	mm	1.255 / 1.380	1.525 / 1.650	1.590 / 1.720
Net Height / gross height	mm	1.694 / 1.840	1.694 / 1.840	1.812 / 1.940
Net Weight/ gross weight	Kg	342 / 356	357 / 372	380 / 395
OTHERS				
Noise level	dB	64	64	64

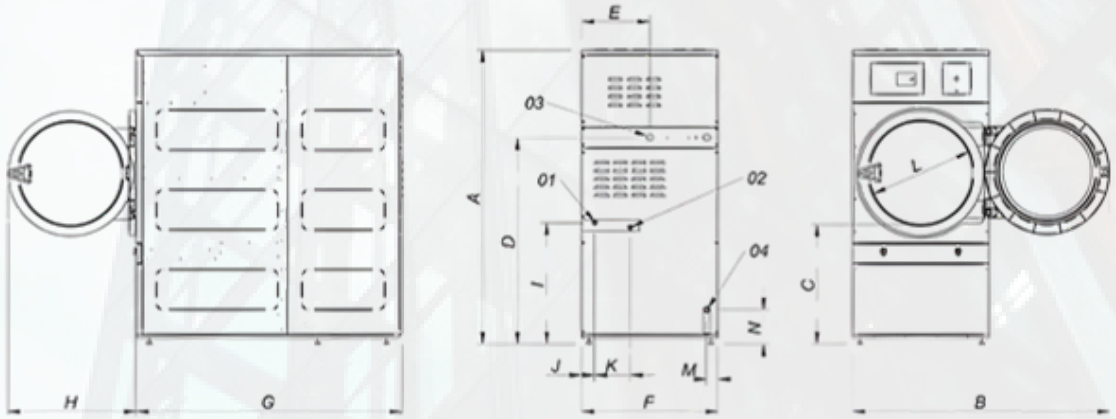

01 Refrigeration water inlet 1/2"
02 Refrigeration water outlet (hot) 1/2"
03 Electric connection
04 Drain 3/4"

	A	B	C	D	E	F	G	H	I	J	K	L	M	N
DD-11 HP GOLD	1 694	1 447	689	1 190	392	785	1 255	735	700	75	205	575	67	197
DD-16-HP GOLD	1 694	1 447	689	1 190	392	785	1 525	735	700	75	205	575	67	197
DD-23 HP GOLD	1 812	1 552	743	1 190	445	890	1 595	735	700	127	205	575	119	250

TUMBLE DRYERS
ES EASY LINE SERIES 11-36 KG
IMESA

The ES Easy line by IMESA, equipped with integrated digital controls for temperature regulation, represents the entry-level solution in the range: simple machines, yet engineered to ensure maximum reliability and high-level performance.



MODELS
1. EL ES-11 KG
2. EL ES-14 KG
3. EL ES-18 KG
4. EL ES-23 KG
5. EL ES-26 KG
6. EL ES-32 KG
7. EL ES-36 KG

TOUCH SCREEN
- IM.7EASY is the control unit that allows the management of drying time and temperature.
- 4-digit keypad control unit.

AIRFLOW
- D-FLOW SYSTEM: new axial air flow system inside the drum.

FEATURES
- Automatic Cooldown.
- **3 heating systems** available: electric, steam and gas
- **Intelligent airflow** into the drum for quality drying and reduced energy consumption.
- The high evaporation speed and the new axial air system **D-FLOW SYSTEM** allow the optimization of the available energy and guarantee rapid and effective cycles.

DRUM
- Alternating drum rotation direction Galvanised basket with SOFT CARE.

DOOR
- Big door with reversible opening.

OTHERS
- Anti-crushing filter.
- The drum alternating rotation reversal is standard on the **23, 26, 32 and 36 kg** models, while it is optional for the **11, 14 and 18 kg** models. It ensures uniform drying, reducing creases and tangles.

FEATURES

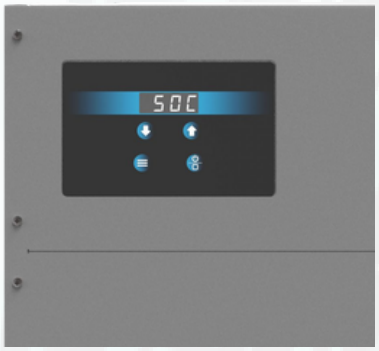

- Cool down system, air cooling at the end of the cycle, and anti-wrinkle function for perfect and easy ironing.



- Electronic control of door opening to avoid opening errors and all types of contamination.



- The Easy line is compatible with self-service payment systems.

ES EASY LINE 11-14-18-23-26-32-36 KG
DATA SHEET

TECHNICAL DATA	EL ES 11	EL ES 14	EL ES 18	EL ES 23	EL ES 26	EL ES 32	EL ES 36
Capacity1:9- 1:10	10,8 - 9,7 Kg (23.8 - 21.3 lb)	13,7 - 12,4 Kg (30.2 - 27.3 lb)	17,8 - 16,1 Kg (39.2 - 35.5 lb)	23,1 - 20,9 Kg (50.9 - 46 lb)	25,6 - 23,1 Kg (56.4 - 50.9 lb)	31,8 - 28,6 Kg (70.1 - 63 lb)	35,9 - 32,3 Kg (79.1 - 71.2 lb
Drum diameter Ø	756 mm (29.7 inch.)	756 mm (29.7 inch.)	756 mm (29.7 inch.)	977 mm (38.4 inch.)	977 mm (38.4 inch.)	977 mm (38.4 inch.)	977 mm (38.4 inch.)
Drum depth	445 mm (17.5 inch.)	565 mm (22.2 inch.)	736 mm (28.9 inch.)	565 mm (22.2 inch.)	625 mm (24.6 inch.)	775 mm (30.5 inch.)	875 mm (34.4 inch.)
Drum volume	195 lt	247,5 lt	322 lt	417 lt	462 lt	572 lt	646 lt
Load diameter Ø	560 mm (22 inch.)	560 mm (22 inch.)	560 mm (22 inch.)	777 mm (30.5 inch.)	777 mm (30.5 inch.)	777 mm (30.5 inch.)	777 mm (30.5 inch.)
Standard speed	38 r.p.m	38 r.p.m	38 r.p.m	44 r.p.m	44 r.p.m.	44 r.p.m	44 r.p.m
Air sound intensity	61 dB (A)	61 dB (A)	61 dB (A)	61 dB (A)	61 dB (A)	61 dB (A)	61 dB (A)
Heating leakage	0.15	0.15	0.15	0.15	0.15	0.15	0.15
Vent air\smokes Ø	150 mm (5.9 inch.)	150 mm (5.9 inch.)	150 mm (5.9 inch.)	200 mm (7.8 inch.)	200 mm (7.8 inch.)	200 mm (7.8 inch.)	200 mm (7.8 inch.)
Air flow	1200 m3/h (710 CFM)	1200 m3/h (710 CFM)	1200 m3/h (710 CFM)	1680 m3/h (990 CFM)	1680 m3/h (990 CFM)	1680 m3/h (990 CFM)	1680 m3/h (990 CFM)
Max counterpressure	10 mt	10 mt	10 mt	10 mt	10 mt	10 mt	10 mt
Machine dimension WxDxH (100 mm = 3.93 inch.)	789x796x1647 mm	789x916x1647 mm	789x1086x1647 mm	1010x916x1932 mm	1010x976x1932 mm	1010x1126x1932 mm	1010x1226x1932 mm
Net weight (electric \ gas \ steam) (1 Kg = 2,205 lb)	191 \ 187 \ 206 Kg	202 \ 198 \ 217 Kg	218 \ 220 \ 239 Kg	261 \ 267 \ 286 Kg	270 \ 280 \ 299 Kg	282 \ 293 \ 312 Kg	295 \ 305 \ 324 Kg
Std. packing dimension: WxDxH (100 mm = 3.93 inch.)	836x790x1810 mm -	836x910x1810 mm	836x1080x1810 mm	1057x910x2095 mm	1057x970x2095 mm	1057x1120x2095 mm	1057x1210x2095 mm
Wooden case dimension: WxDxH (100 mm = 3.93 inch.)	mm	mm	mm	mm	mm	mm	mm
Std. gross weight (electric \ gas \ steam) (1 Kg = 2,205 lb)	200 \ 196 \ 215 Kg	212 \ 208 \ 227 Kg	231 \ 233 \ 252 Kg	273 \ 279 \ 298 Kg	283 \ 293 \ 313 Kg	297 \ 308 \ 327 Kg	311 \ 321 \ 340 Kg
Std. packaging volume	1,2 mc (42.3 ft³)	1,4 mc (49.4 ft³)	1,6 mc (56.5 ft³)	2 mc (70.6 ft³)	2,1 mc (74.1 ft³)	2,5 mc (88.2 ft³)	2,7 mc (95.3 ft³)
STD. packed machines in to 20' container	14 pz	12 pz.	12 pz.	12 pz	12 pz	10 pz.	10 pz
STD. packed machines in to 40' container	30 pz	28 pz.	28 pz.	26 pz.	24 pz.	22 pz.	21 pz.
DATA BY TYPE OF HEATING							
Electricalheating power / Electricaltotalpower (electric machines)	6 x 2 = 12 kW / 12,7 kW	6 x 2 = 12 kW / 12,7 kW	6 x 3 = 18 kW / 18,7 kW	6 x 4 = 24 kW / 25,1 kW	6 x 4 = 24 kW / 25,1 kW	6 x 5 = 30 kW / 31,1 kW	6 x 5 = 30 kW / 31,1 kW
Electric absorption (50/60Hz) 3ph380V-480V(+N)/3ph220V-240V/1ph230V (electric machines)	20 / 35 / 60 A	20 / 35 / 60 A	27 / 47 / 81 A	37 / 64 / 111 A	37 / 64 / 111 A	45 / 78 / 135 A	45 / 78 / 135 A
Electric energy consumption* (electric machines)	6,1 kWh	8,3 kWh	10,7 kWh	12 kWh	13 kWh	15 kWh	18 kWh
Steam consumption (5 bar)* (steam machines)	26 kg	36 kg	46 kg	49 kg	52 kg	64 kg	73 kg
Electrical power* (steam machines)	0,7 kW	0,7 kW	0,7 kW	1,1 kW	1,1 kW	1,1 kW	1,1 kW
Electric absorption (50/60Hz) 3ph380V-480V(+N)/3ph220V-240V/1ph230V (steam machines)	1,5 / 3 / 4 A	1,5 / 3 / 4 A	1,5 / 3 / 4 A	2,1 / 4 / 6,3 A	2,1 / 4 / 6,3 A	2,1 / 4 / 6,3 A	2,1 / 4 / 6,3 A
Electric energy consumption* (steam machines)	0,2 kWh	0,2 kWh	0,2 kWh	0,5 kWh	0,5 kWh	0,5 kWh	0,5 kWh
Heating power / Derated heating power (NATRAL GAS macchines)	23,5 kW / 13 kW	23,5 kW / 13 kW	23,5 kW / 13 kW	32 kW / 23 kW	32 kW / 23 kW	42 kW / 34 kW	42 kW / 34 kW
Heating power / Derated heating power (GAS GPL macchines)	21 kW / 11 kW	21 kW / 11 kW	21 kW / 11 kW	32 kW / 23 kW	32 kW / 23 kW	42 kW / 34 kW	42 kW / 34 kW
Consumption NATURAL GAS / Consumption GPL (GAS machines)	0,7 m3 / 0,5 kg	0,9 m3 / 0,7 kg	1,1 m3 / 0,8 kg	1,6 m3 / 1,1 kg	1,6 m3 / 1,1 kg	2,3 m3 / 1,5 kg	2,8 m3 / 1,7 kg
Electrical power* (GAS machines)	0,7 kW	0,7 kW	0,7 kW	1,1 kW	1,1 kW	1,1 kW	1,1 kW
Electric absorption (50/60Hz) 3ph380V-480V(+N)/3ph220V-240V/1ph230V (GAS machines)	1,5 / 3 / 4 A	1,5 / 3 / 4 A	1,5 / 3 / 4 A	2,1 / 4 / 6,3 A	2,1 / 4 / 6,3 A	2,1 / 4 / 6,3 A	2,1 / 4 / 6,3 A
Electric energy consumption* (GAS machines)	0,2 kWh	0,2 kWh	0,2 kWh	0,5 kWh	0,5 kWh	0,5 kWh	0,5 kWh
Cable section (electric machines / steam and GAS machines)	6-10-16 / 2,5 mm2	6-10-16 / 2,5 mm2	10-16-25 / 2,5 mm2	10-16-25 / 2,5 mm2	10-16-25 / 2,5 mm2	10-16-35 / 2,5 mm2	10-16-35 / 2,5 mm2



mm	A	B	C	D	E	F	G	H	I	J	K	L	N	P	Q	R	S	T	U	V	W_{min}	X_{min}	Y	Z
EL ES 11	789	796	1647	1520	655	999	20	1462	876	724	688	573	130	125	1532	1622	720	570	33	735	10	500	80	732
EL ES 14	789	916	1647	1520	655	999	20	1462	876	724	688	573	130	125	1532	1622	720	690	33	735	10	500	80	852
EL ES 18	789	1086	1647	1520	655	999	20	1462	876	724	688	573	130	125	1532	1622	720	860	33	735	10	500	80	1022
EL ES 23	1010	916	1932	1805	700	1173	20	1747	1031	943	947	669	155	150	1817	1907	941	690	33	975	10	500	80	852
EL ES 26	1010	976	1932	1805	700	1173	20	1747	1031	943	947	669	155	150	1817	1907	941	750	33	975	10	500	80	912
EL ES 32	1010	1126	1932	1805	700	1173	20	1747	1031	943	947	669	155	150	1817	1907	941	900	33	975	10	500	80	1062
EL ES 36	1010	1226	1932	1805	700	1173	20	1747	1031	943	947	669	155	150	1817	1907	941	1000	33	975	10	500	80	1162

TUMBLE DRYERS
ES SMART LINE SERIES 11-36 KG
IMESA

The ES Smart tumble dryer line delivers top-level performance and ensures high energy efficiency. It's the perfect choice for facilities looking to manage drying programs independently, with flexibility and professional precision.

MODELS
1. SL ES-11 KG
2. SL ES-14 KG
3. SL ES-18 KG
4. SL ES-23 KG
5. SL ES-26 KG
6. SL ES-32 KG
7. SL ES-36 KG



TOUCH SCREEN
- IM.10 Touch Screen Computer for efficient programming of drying cycles and performance monitoring.

AIRFLOW
- D-FLOW SYSTEM: new axial air flow system inside the drum.

FEATURES
- Drying parameters can be freely modified even when the cycle is running.
- Dual power: two independently switchable heating groups.
- **3 heating systems** available: electric, steam and gas
- New practical **drawer filter**, easily removable and easy to clean.
- **Cool down system**, air cooling at the end of the cycle, and anti-wrinkle function for perfect and easy ironing.

DRUM
- AISI 304 stainless steel drum with new "soft care" perforation for greater delicacy on fabrics.
- Standard drum alternating rotation reversal.

DOOR
- Large double-glazed door, opening to the right and reversible on the field (extension kit included).

OTHERS
- Multi-step heating function for optimal temperature management during the cycle: ensures greater delicacy in the treatment of garments.

FEATURES



- IM.10 allows for virtually unlimited solutions to suit any type of fabric.

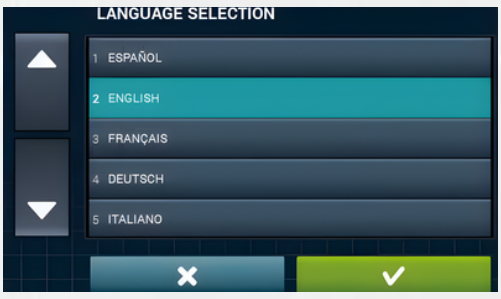

- Electronic control of door opening to avoid opening errors and all types of contamination.



- The Easy line is compatible with self-service payment systems.

ES SMART LINE 11-14-18-23-26-32-36 KG
DATA SHEET

TECHNICAL DATA	SL ES 11	SL ES 14	SL ES 18	SL ES 23	SL ES 26	SL ES 32	SL ES 36
Capacity1:9- 1:10	10,8 - 9,7 Kg (23.8 - 21.3 lb)	13,7 - 12,4 Kg (30.2 - 27.3 lb)	17,8 - 16,1 Kg (39.2 - 35.5 lb)	23,1 - 20,9 Kg (50.9 - 46 lb)	25,6 - 23,1 Kg (56.4 - 50.9 lb)	31,8 - 28,6 Kg (70.1 - 63 lb)	35,9 - 32,3 Kg (79.1 - 71.2 lb)
Drum diameter Ø	756 mm (29.7 inch.)	756 mm (29.7 inch.)	756 mm (29.7 inch.)	977 mm (38.4 inch.)	977 mm (38.4 inch.)	977 mm (38.4 inch.)	977 mm (38.4 inch.)
Drum depth	445 mm (17.5 inch.)	565 mm (22.2 inch.)	736 mm (28.9 inch.)	565 mm (22.2 inch.)	625 mm (24.6 inch.)	775 mm (30.5 inch.)	875 mm (34.4 inch.)
Drum volume	195 lt	247,5 lt	322 lt	417 lt	462 lt	572 lt	646 lt
Load diameter Ø	560 mm (22 inch.)	560 mm (22 inch.)	560 mm (22 inch.)	777 mm (30.5 inch.)	777 mm (30.5 inch.)	777 mm (30.5 inch.)	777 mm (30.5 inch.)
Standard speed	38 r.p.m.	38 r.p.m	38 r.p.m	44 r.p.m.	44 r.p.m	44 r.p.m	44 r.p.m
Air sound intensity	61 dB (A)	61 dB (A)	61 dB (A)	61 dB (A)	61 dB (A)	61 dB (A)	61 dB (A)
Heating leakage	15%	15%	15%	15%	15%	15%	15%
Vent air\smokes Ø	150 mm (5.9 inch.)	150 mm (5.9 inch.)	150 mm (5.9 inch.)	200 mm (7.8 inch.)	200 mm (7.8 inch.)	200 mm (7.8 inch.)	200 mm (7.8 inch.)
Air flow	1200 m3/h (710 CFM)	1200 m3/h (710 CFM)	1200 m3/h (710 CFM)	1680 m3/h (990 CFM)	1680 m3/h (990 CFM)	1680 m3/h (990 CFM)	1680 m3/h (990 CFM)
Max counterpressure	10 mt	10 mt	10 mt	10 mt	10 mt	10 mt	10 mt
Machine dimension WxDxH (100 mm = 3.93 inch.)	789x796x1647 mm	789x916x1647 mm	789x1086x1647 mm	1010x916x1932 mm	1010x976x1932 mm	1010x1126x1932 mm	1010x1226x1932 mm
Net weight (electric \ gas \ steam) (1 Kg = 2,205 lb)	191 \ 187 \ 206 Kg	202 \ 198 \ 217 Kg	218 \ 220 \ 239 Kg	261 \ 267 \ 286 Kg	270 \ 280 \ 299 Kg	282 \ 293 \ 312 Kg	295 \ 305 \ 324 Kg
Std. packing dimension: WxDxH (100 mm = 3.93 inch.)	836x790x1810 mm	836x910x1810 mm	836x1080x1810 mm	1057x910x2095 mm	1057x970x2095 mm	1057x1120x2095 mm	1057x1210x2095 mm
Wooden case dimension: WxDxH (100 mm = 3.93 inch.)	mm	mm	mm	mm	mm	mm	mm
Std. gross weight (electric \ gas \ steam) (1 Kg = 2,205 lb)	200 \ 196 \ 215 Kg	212 \ 208 \ 227 Kg	231 \ 233 \ 252 Kg	273 \ 279 \ 298 Kg	283 \ 293 \ 313 Kg	297 \ 308 \ 327 Kg	311 \ 321 \ 340 Kg
Std. packaging volume	1,2 mc (42.3 ft³)	1,4 mc (49.4 ft³)	1,6 mc (56.5 ft³)	2 mc (70.6 ft³)	2,1 mc (74.1 ft³)	2,5 mc (88.2 ft³)	2,7 mc (95.3 ft³)
STD. packed machines in to 20' container	14 pz	12 pz.	12 pz	12 pz	12 pz	10 pz	10 pz
STD. packed machines in to 40' container	30 pz	28 pz	28 pz	26 pz	24 pz	22 pz	21 pz
DATA BY TYPE OF HEATING							
Electricalheating power / Electricaltotalpower (electric machines)	6 x 2 = 12 kW / 12,7 kW	6 x 2 = 12 kW / 12,7 kW	6 x 3 = 18 kW / 18,7 kW	6 x 4 = 24 kW / 25,1 kW	6 x 4 = 24 kW / 25,1 kW	6 x 5 = 30 kW / 31,1 kW	6 x 5 = 30 kW / 31,1 kW
Electric absorption (50/60Hz) 3ph380V-480V(+N)/3ph220V-240V/1ph230V (electric machines)	20 / 35 / 60 A	20 / 35 / 60 A	27 / 47 / 81 A	37 / 64 / 111 A	37 / 64 / 111 A	45 / 78 / 135 A	45 / 78 / 135 A
Electric energy consumption* (electric machines)	6,1 kWh	8,3 kWh	10,7 kWh	12 kWh	13 kWh	15 kWh	18 kWh
Steam consumption (5 bar)* (steam machines)	26 kg	36 kg	46 kg	49 kg	52 kg	64 kg	73 kg
Electrical power* (steam machines)	0,7 kW	0,7 kW	0,7 kW	1,1 kW	1,1 kW	1,1 kW	1,1 kW
Electric absorption (50/60Hz) 3ph380V-480V(+N)/3ph220V-240V/1ph230V (steam machines)	1,5 / 3 / 4 A	1,5 / 3 / 4 A	1,5 / 3 / 4 A	2,1 / 4 / 6,3 A	2,1 /4 / 6,3 A	2,1 / 4 / 6,3 A	2,1 /4 / 6,3 A
Electric energy consumption* (steam machines)	0,2 kWh	0,2 kWh	0,2 kWh	0,5 kWh	0,5 kWh	0,5 kWh	0,5 kWh
Heating power / Derated heating power (NATRAL GAS macchines)	23,5 kW / 13 kW	23,5 kW / 13 kW	23,5 kW / 13 kW	32 kW / 23 kW	32 kW / 23 kW	42 kW / 34 kW	42 kW / 34 kW
Heating power / Derated heating power (GAS GPL macchines)	21 kW / 11 kW	21 kW / 11 kW	21 kW / 11 kW	32 kW / 23 kW	32 kW / 23 kW	42 kW / 34 kW	42 kW / 34 kW
Consumption NATURAL GAS / Consumption GPL (GAS machines)	0,7 m3 / 0,5 kg	0,9 m3 / 0,7 kg	1,1 m3 / 0,8 kg	1,6 m3 / 1,1 kg	1,6 m3 / 1,1 kg	2,3 m3 / 1,5 kg	2,8 m3 / 1,7 kg
Electrical power* (GAS machines)	0,7 kW	0,7 kW	0,7 kW	1,1 kW	1,1 kW	1,1 kW	1,1 kW
Electric absorption (50/60Hz) 3ph380V-480V(+N)/3ph220V-240V/1ph230V (GAS machines)	1,5 / 3 / 4 A	1,5 / 3 / 4 A	1,5 / 3 / 4 A	2,1 / 4 / 6,3 A	2,1 /4 / 6,3 A	2,1 / 4 / 6,3 A	2,1 /4 / 6,3 A
Electric energy consumption* (GAS machines)	0,2 kWh	0,2 kWh	0,2 kWh	0,5 kWh	0,5 kWh	0,5 kWh	0,5 kWh
Cable section (electric machines / steam and GAS machines)	6-10-16 / 2,5 mm2	6-10-16 / 2,5 mm2	10-16-25 / 2,5 mm2	10-16-25 / 2,5 mm2	10-16-25 / 2,5 mm2	10-16-35 / 2,5 mm2	10-16-35 / 2,5 mm2

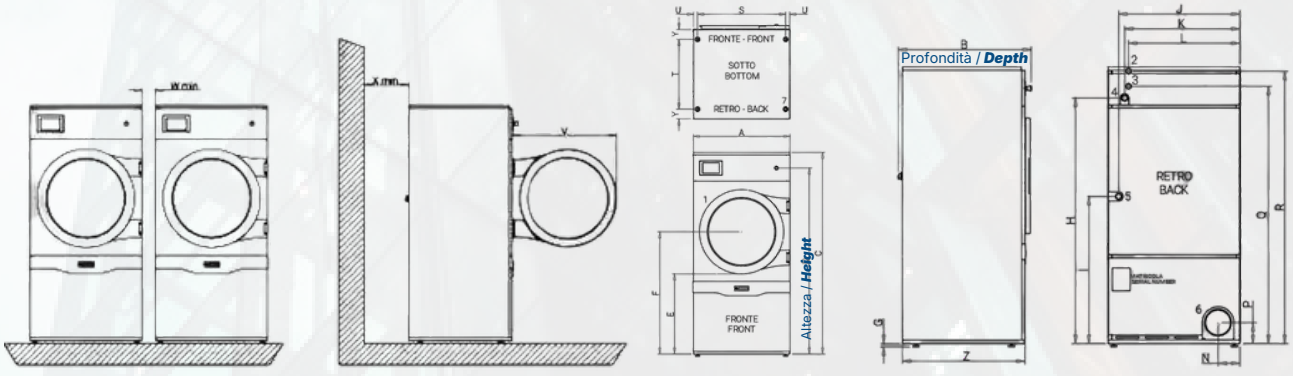

mm	A	B	C	D	E	F	G	H	I	J	K	L	N	P	Q	R	S	T	U	V	W_{min}	X_{min}	Y	Z
SL ES 11	789	796	1647	1520	655	999	20	1462	876	724	688	573	130	125	1532	1622	720	570	33	735	10	500	80	732
SL ES 14	789	916	1647	1520	655	999	20	1462	876	724	688	573	130	125	1532	1622	720	690	33	735	10	500	80	852
SL ES 18	789	1086	1647	1520	655	999	20	1462	876	724	688	573	130	125	1532	1622	720	860	33	735	10	500	80	1022
SL ES 23	1010	916	1932	1805	700	1173	20	1747	1031	943	947	669	155	150	1817	1907	941	690	33	975	10	500	80	852
SL ES 26	1010	976	1932	1805	700	1173	20	1747	1031	943	947	669	155	150	1817	1907	941	750	33	975	10	500	80	912
SL ES 32	1010	1126	1932	1805	700	1173	20	1747	1031	943	947	669	155	150	1817	1907	941	900	33	975	10	500	80	1062
SL ES 36	1010	1226	1932	1805	700	1173	20	1747	1031	943	947	669	155	150	1817	1907	941	1000	33	975	10	500	80	1162

TUMBLE DRYERS
ES PREMIUM LINE SERIES 11-36 KG
IMESA

At the top of the range, the ES Premium dryer line combines exceptional drying performance with superior energy efficiency. With advanced, easily programmable functions, it's the perfect solution for businesses that demand precision and control in every cycle.

MODELS
1. PL ES-11 KG
2. PL ES-14 KG
3. PL ES-18 KG
4. PL ES-23 KG
5. PL ES-26 KG
6. PL ES-32 KG
7. PL ES-36 KG



TOUCH SCREEN
- IM.10 Touch Screen Computer for efficient programming of drying cycles and performance monitoring.

AIRFLOW
- D-FLOW SYSTEM: new axial air flow system inside the drum.
- Anti crease cycle.

FEATURES
- Humidity control sensor
- Drying parameters can be freely modified even when the cycle is running.
- Standard drum alternating rotation reversal.
- **3 heating systems** available: electric, steam and gas
- New practical **drawer filter**, easily removable and easy to clean.
- **Cool down** system operated by IM.10, air cooling at the end of the cycle, and anti-wrinkle function for perfect and easy ironing.

DRUM
- AISI 304 stainless steel drum with new "soft care" perforation for greater delicacy on fabrics.

DOOR
- Large double-glazed door, opening to the right and reversible on the field (extension kit included).

OTHERS
- DSC: drum rotation speed control
- FSC: vacuum speed control (NOT available on GAS model)
- Humidity control sensor
- Multi-step heating function for optimal temperature management during the cycle: ensures greater delicacy in the treatment of garments.

FEATURES



- IM.10 allows for virtually unlimited solutions to suit any type of fabric.

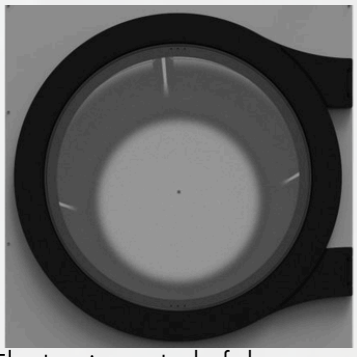

- Electronic control of door opening to avoid opening errors and all types of contamination.



- The Easy line is compatible with self-service payment systems.

ES PREMIUM LINE 11-14-18-23-26-32-36 KG
DATA SHEET

TECHNICAL DATA	PL ES 11	PL ES 14	PL ES 18	PL ES 23	PL ES 26	PL ES 32	PL ES 36
Capacity1:9- 1:10	10,8 - 9,7 Kg (23.8 - 21.3 lb)	13,7 - 12,4 Kg (30.2 - 27.3 lb)	17,8 - 16,1 Kg (39.2 - 35.5 lb)	23,1 - 20,9 Kg (50.9 - 46 lb)	25,6 - 23,1 Kg (56.4 - 50.9 lb)	31,8 - 28,6 Kg (70.1 - 63 lb)	35,9 - 32,3 Kg (79.1 - 71.2 lb)
Drum diameter Ø	756 mm (29.7 inch.)	756 mm (29.7 inch.)	756 mm (29.7 inch.)	977 mm (38.4 inch.)	977 mm (38.4 inch.)	977 mm (38.4 inch.)	977 mm (38.4 inch.)
Drum depth	445 mm (17.5 inch.)	565 mm (22.2 inch.)	736 mm (28.9 inch.)	565 mm (22.2 inch.)	625 mm (24.6 inch.)	775 mm (30.5 inch.)	875 mm (34.4 inch.)
Drum volume	195 lt	247,5 lt	322 lt	417 lt	462 lt	572 lt	646 lt
Load diameter Ø	560 mm (22 inch.)	560 mm (22 inch.)	560 mm (22 inch.)	777 mm (30.5 inch.)	777 mm (30.5 inch.)	777 mm (30.5 inch.)	777 mm (30.5 inch.)
Standard speed	38 r.p.m.	38 r.p.m	38 r.p.m	44 r.p.m	44 r.p.m	44 r.p.m	44 r.p.m
Air sound intensity	61 dB (A)	61 dB (A)	61 dB (A)	61 dB (A)	61 dB (A)	61 dB (A)	61 dB (A)
Heating leakage	15%	15%	15%	15%	15%	15%	15%
Vent air\smokes Ø	150 mm (5.9 inch.)	150 mm (5.9 inch.)	150 mm (5.9 inch.)	200 mm (7.8 inch.)	200 mm (7.8 inch.)	200 mm (7.8 inch.)	200 mm (7.8 inch.)
Air flow	1200 m3/h (710 CFM)	1200 m3/h (710 CFM)	1200 m3/h (710 CFM)	1680 m3/h (990 CFM)	1680 m3/h (990 CFM)	1680 m3/h (990 CFM)	1680 m3/h (990 CFM)
Max counterpressure	10 mt	10 mt	10 mt	10 mt	10 mt	10 mt	10 mt
Machine dimension WxDxH (100 mm = 3.93 inch.)	789x796x1647 mm	789x916x1647 mm	789x1086x1647 mm	1010x916x1932 mm	1010x976x1932 mm	1010x1126x1932 mm	1010x1226x1932 mm
Net weight (electric \ gas \ steam) (1 Kg = 2,205 lb)	191 \ 187 \ 206 Kg	202 \ 198 \ 217 Kg	218 \ 220 \ 239 Kg	261 \ 267 \ 286 Kg	270 \ 280 \ 299 Kg	282 \ 293 \ 312 Kg	295 \ 305 \ 324 Kg
Std. packing dimension: WxDxH (100 mm = 3.93 inch.)	836x790x1810 mm	836x910x1810 mm	836x1080x1810 mm	1057x910x2095 mm	1057x970x2095 mm	1057x1120x2095 mm	1057x1210x2095 mm
Wooden case dimension: WxDxH (100 mm = 3.93 inch.)	mm	mm	mm	mm	mm	mm	mm
Std. gross weight (electric \ gas \ steam) (1 Kg = 2,205 lb)	200 \ 196 \ 215 Kg	212 \ 208 \ 227 Kg	231 \ 233 \ 252 Kg	273 \ 279 \ 298 Kg	283 \ 293 \ 313 Kg	297 \ 308 \ 327 Kg	311 \ 321 \ 340 Kg
Std. packaging volume	1,2 mc (42.3 ft³)	1,4 mc (49.4 ft³)	1,6 mc (56.5 ft³)	2 mc (70.6 ft³)	2,1 mc (74.1 ft³)	2,5 mc (88.2 ft³)	2,7 mc (95.3 ft³)
STD. packed machines in to 20' container	14 pz	12 pz	12 pz	12 pz	12 pz	10 pz	10 pz
STD. packed machines in to 40' container	30 pz	28 pz	28 pz	26 pz	24 pz	22 pz.	21 pz
DATA BY TYPE OF HEATING							
Electricalheating power / Electricaltotalpower (electric machines)	6 x 2 = 12 kW / 12,7 kW	6 x 2 = 12 kW / 12,7 kW	6 x 3 = 18 kW / 18,7 kW	6 x 4 = 24 kW / 25,1 kW	6 x 4 = 24 kW / 25,1 kW	6 x 5 = 30 kW / 31,1 kW	6 x 5 = 30 kW / 31,1 kW
Electric absorption (50/60Hz) 3ph380V-480V(+N)/3ph220V-240V/1ph230V (electric machines)	20 / 35 / 60 A	20 / 35 / 60 A	27 / 47 / 81 A	37 / 64 / 111 A	37 / 64 / 111 A	45 / 78 / 135 A	45 / 78 / 135 A
Electric energy consumption* (electric machines)	6,1 kWh	8,3 kWh	10,7 kWh	12 kWh	13 kWh	15 kWh	18 kWh
Steam consumption (5 bar)* (steam machines)	26 kg	36 kg	46 kg	49 kg	52 kg	64 kg	73 kg
Electrical power* (steam machines)	0,7 kW	0,7 kW	0,7 kW	1,1 kW	1,1 kW	1,1 kW	1,1 kW
Electric absorption (50/60Hz) 3ph380V-480V(+N)/3ph220V-240V/1ph230V (steam machines)	1,5 / 3 / 4 A	1,5 / 3 / 4 A	1,5 / 3 / 4 A	2,1 / 4 / 6,3 A	2,1 / 4 / 6,3 A	2,1 / 4 / 6,3 A	2,1 / 4 / 6,3 A
Electric energy consumption* (steam machines)	0,2 kWh	0,2 kWh	0,2 kWh	0,5 kWh	0,5 kWh	0,5 kWh	0,5 kWh
Heating power / Derated heating power (NATRAL GAS macchines)	23,5 kW / 13 kW	23,5 kW / 13 kW	23,5 kW / 13 kW	32 kW / 23 kW	32 kW / 23 kW	42 kW / 34 kW	42 kW / 34 kW
Heating power / Derated heating power (GAS GPL macchines)	21 kW / 11 kW	21 kW / 11 kW	21 kW / 11 kW	32 kW / 23 kW	32 kW / 23 kW	42 kW / 34 kW	42 kW / 34 kW
Consumption NATURAL GAS / Consumption GPL (GAS machines)	0,7 m3 / 0,5 kg	0,9 m3 / 0,7 kg	1,1 m3 / 0,8 kg	1,6 m3 / 1,1 kg	1,6 m3 / 1,1 kg	2,3 m3 / 1,5 kg	2,8 m3 / 1,7 kg
Electrical power* (GAS machines)	0,7 kW	0,7 kW	0,7 kW	1,1 kW	1,1 kW	1,1 kW	1,1 kW
Electric absorption (50/60Hz) 3ph380V-480V(+N)/3ph220V-240V/1ph230V (GAS machines)	1,5 / 3 / 4 A	1,5 / 3 / 4 A	1,5 / 3 / 4 A	2,1 / 4 / 6,3 A	2,1 / 4 / 6,3 A	2,1 / 4 / 6,3 A	2,1 / 4 / 6,3 A
Electric energy consumption* (GAS machines)	0,2 kWh	0,2 kWh	0,2 kWh	0,5 kWh	0,5 kWh	0,5 kWh	0,5 kWh
Cable section (electric machines / steam and GAS machines)	6-10-16 / 2,5 mm2	6-10-16 / 2,5 mm2	10-16-25 / 2,5 mm2	10-16-25 / 2,5 mm2	10-16-25 / 2,5 mm2	10-16-35 / 2,5 mm2	10-16-35 / 2,5 mm2

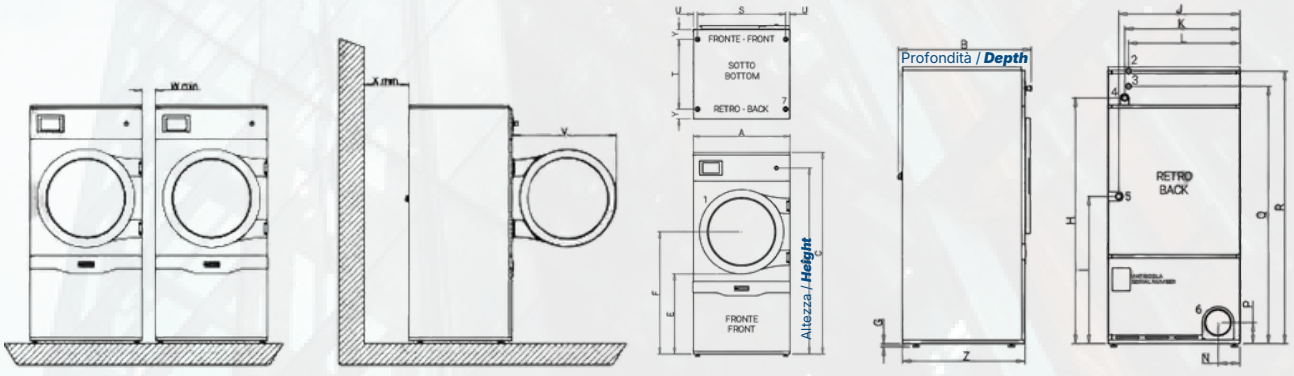

mm	A	B	C	D	E	F	G	H	I	J	K	L	N	P	Q	R	S	T	U	V	W_{min}	X_{min}	Y	Z
PL ES 11	789	796	1647	1520	655	999	20	1462	876	724	688	573	130	125	1532	1622	720	570	33	735	10	500	80	732
PL ES 14	789	916	1647	1520	655	999	20	1462	876	724	688	573	130	125	1532	1622	720	690	33	735	10	500	80	852
PL ES 18	789	1086	1647	1520	655	999	20	1462	876	724	688	573	130	125	1532	1622	720	860	33	735	10	500	80	1022
PL ES 23	1010	916	1932	1805	700	1173	20	1747	1031	943	947	669	155	150	1817	1907	941	690	33	975	10	500	80	852
PL ES 26	1010	976	1932	1805	700	1173	20	1747	1031	943	947	669	155	150	1817	1907	941	750	33	975	10	500	80	912
PL ES 32	1010	1126	1932	1805	700	1173	20	1747	1031	943	947	669	155	150	1817	1907	941	900	33	975	10	500	80	1062
PL ES 36	1010	1226	1932	1805	700	1173	20	1747	1031	943	947	669	155	150	1817	1907	941	1000	33	975	10	500	80	1162

TUMBLE DRYERS
ES LINE SERIES 55/75 KG
IMESA

IMESA ES series 55 and 75 kg tumble dryers are the optimum solution for medium/high productivity laundries. The result is perfectly dried linen. The standard drum rotation inversion greatly reduces consumption. An excellent result is guaranteed, even with large items of linen!

MODELS
1. ES- 55 KG
2. ES- 75 KG



TOUCH SCREEN
- IM10 computer touch screen for easy programming and monitoring of drying cycles.

AIRFLOW
- Funzione riscaldamento multistep
- Anti Crease Cycle

FEATURES
- Cooldown and multi-step heating function as standard.
- **3 heating methods**: electric, steam, gas
- Rotation speed and rotation/pause times can be modified for perfect treatment of all types of linen.
- Uniform temperature and hot air flow throughout the drum for even drying
- **Power Control function**: the dryer can be heated at various power levels. The operator can programme different power levels during the same cycle

DRUM
- Alternating drum rotation direction
- Stainless steel AISI 304 drum drum without sharp edges to further protect the items.

DOOR
- Big door with double glass and opening at 180°

OTHERS
- Automatic motorised door, immediate secure closing.
- Large door with 180° opening.
- Drying chamber insulated thermally and acoustically with rockwool to avoid heat loss to the outside, exploit the hot air and reduce consumption.

FEATURES



- IM.10 allows for virtually unlimited solutions to suit any type of fabric.



- Door with double glass for perfect heat insulation and energy savings.



- Available Tilt system to load and unload the linen.

ES LINE 55/75 KG
DATA SHEET

TECHNICAL DATA	ES 55	ES 75
Capacity1:9- 1:10	60 - 55 Kg (132 - 121 lb)	80 - 75 Kg (176 - 165 lb)
Drum diameter Ø	1202 mm (47.3 inch.)	1202 mm (47.3 inch.)
Drum depth	960 mm (37.8 inch.)	1310 mm (51.6 inch.)
Drum volume	1086 lt	1486 lt
Load diameter Ø	890 mm (35 inch.)	890 mm (35 inch.)
Standard speed	25 r.p.m	25 r.p.m
Air sound intensity	74 dB (A)	74 dB (A)
Heating leakage	15%	0.15
Vent air\smokes Ø	300 mm (11,8 inch.)	300 mm (11,8 inch.)
Air flow	1980 m³/h	1980 m³/h
Max counterpressure	10 mt	10 mt
Compressed air in Ø	6 mm (0.23 inch.)	6 mm (0.23 inch.)
Compressed air consumption (steam machine)	5 l/h	5 l/h
Machine dimension WxDxH (100 mm = 3.93 inch.)	1360x1700x2260 mm	1360x1930x2260mm
Net weight (electric \ gas \ steam) (1 Kg = 2,205 lb)	813 \ 827 \ 806 Kg	957 \ 971 \ 972 Kg
Packing dimension: WxDxH (100 mm = 3.93 inch.)	1540x1700x2430 mm	1540x2050x2430 mm
Height without pallet (for container) (100 mm = 3.93 inch.)	2290 mm	2290 mm
Gross weight (electric \ gas \ steam) (1 Kg = 2,205 lb)	882 \ 896 \ 875 Kg	1021 \ 1035 \ 1036 Kg
Volume whit pallet - Volume without pallet	6,3 - 5,9 m³	7,6 - 7,1 m³
STD. packed machines in to 20' container	3 pz.	3 pz.
STD. packed machines in to 40' container	7 pz.	7 pz.
DATA BY TYPE OF HEATING		
Electrical Heating (electric machines)	58,5 kW	97,5 kW
Consumption* (electric machines)	35,8 kWh	48,8 kWh
Electric absorption (50/60Hz) (electric machines)	60,7 kW	100,5 kW
3ph380V-480V(+N) / 3ph220-240V / 1ph230V 50\60 Hz (electric machines)	88 / 152 / - A	148 / 256 / - A
Cable section (electric machines)	16 / 35 / - mm²	35 / 50 / - mm²
Steam heating consumption* (10 bar)	71 Kg (156.5 lb)	97 Kg (213,8 lb)
GAS heating consumption (kW) (GAS machines)	105 kW	135 G20/110 G25/140 G30/31
GAS heating consumption* (G20 - GPL\GLP) (GAS machines)	3,8 m³ - 2,6 Kg	5,2 m³ - 3,5 Kg
Electric consumption* (steam-GAS machines)	0,7 kWh	1 kWh
Electric absorption (50/60Hz) (steam-GAS machines	2,2 kW	3 kW
3ph380V-480V(+N) / 3ph220-240V / 1ph230V 50\60 Hz (steam-GAS machines))	2,8 / 4,8 / 8,4 A	4 / 7 / 9,5 A
Cable section (steam-GAS machines)	2,5 / 2,5 / 2,5 mm²	2,5 / 2,5 / 2,5 mm²

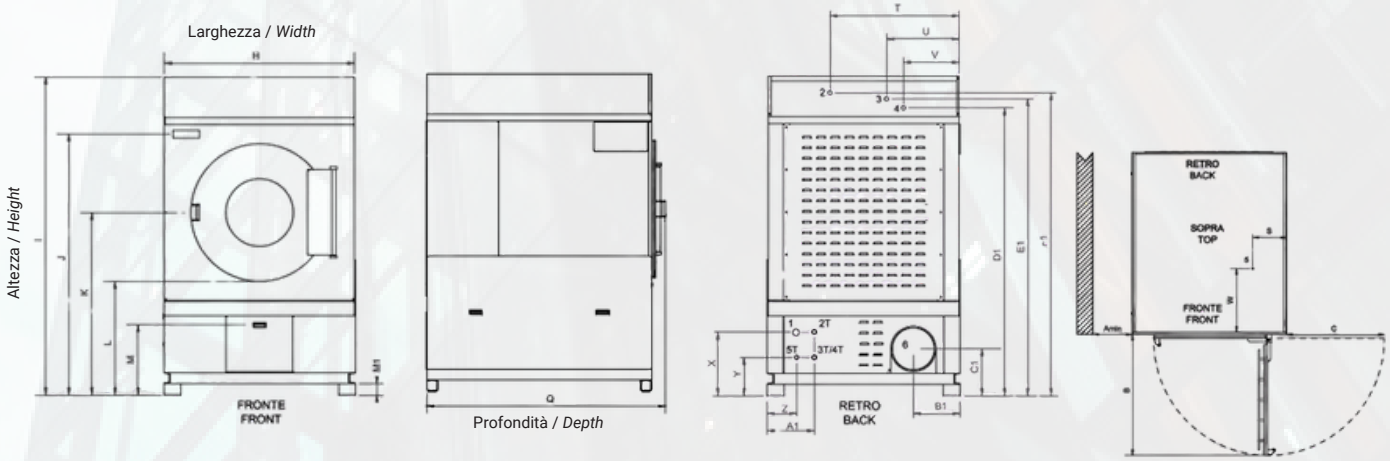

mm	A	B	C	D	E	F	G	H	I	J	K	L	N	P	Q	R	S	T	U	V	W_{min}	X_{min}	Y	Z
PL ES 11	789	796	1647	1520	655	999	20	1462	876	724	688	573	130	125	1532	1622	720	570	33	735	10	500	80	732
PL ES 14	789	916	1647	1520	655	999	20	1462	876	724	688	573	130	125	1532	1622	720	690	33	735	10	500	80	852

TUMBLE DRYERS
ES GREEN LINE SERIES 14/18 KG
IMESA

ES GREEN tumble dryer heated by ELECTRIC HEAT PUMP, there are no emissions to the outside and it can therefore be installed even in a closed environment.

MODELS
1. GL ES- 14 KG
2. GL ES- 18 KG



TOUCH SCREEN
- IM10 computer touch screen for easy programming and monitoring of drying cycles.

AIRFLOW
- Automatic Cooldown
- Anti Crease Cycle

FEATURES
- Like a real tablet, the IM10 touch screen has the same intelligibility, ergonomics and potential as a computer.
- Display signalling for the essential cleaning of the filter.
- **Drying parameters** can be modified after the cycle is started.
- **Infinite** drying solutions.
- The power needed to operate a **dryer with heat pump** is about one third the power needed to operate a traditional dryer.

DRUM
- Stainless steel AISI 304 drum drum without sharp edges to further protect the items.

DOOR
- Big door with double glass.

OTHERS
- Door with double glass for perfect heat insulation and energy savings.
- Large door with 180° opening.
- Drying chamber insulated thermally and acoustically with rockwool to avoid heat loss to the outside, exploit the hot air and reduce consumption.

FEATURES



- IM.10 allows for virtually unlimited solutions to suit any type of fabric.



- Regulation of the number of drum and extractor fan rotations.



- Self-diagnosis to facilitate maintenance.

ES GREEN LINE 14/18 KG
DATA SHEET

TECHNICAL DATA	GL ES 14	GL ES 18
Capacity1:9- 1:10	15 - 14 Kg (33 - 31 lb)	20 - 18 Kg (44 - 39.6 lb)
Drum diameter Ø	756 mm (29.7 inch.)	756 mm (29.7 inch.)
Drum depth	585 mm (23 inch.)	767 mm (30.2 inch.)
Drum volume	263 lt	345 lt
Load diameter Ø	560 mm (22 inch.)	560 mm (22 inch.)
Standard speed	38 r.p.m	38 r.p.m
Air sound intensity	61 dB (A)	61 dB (A)
Heating leakage	15%	15%
Condensed water drain Ø	34 mm (1.3 inch.)	34 mm (1.3 inch.)
Machine dimension: WxDxH (100 mm = 3.93 inch.)	791x1284x1846 mm	791x1451x1846mm
Net weight (1 Kg = 2,205 lb)	337 Kg (742 lb)	352 Kg (776 lb)
Std. packing dimension: WxDxH (100 mm = 3.93 inch.)	840x1460x1990 mm	840x1460x1990 mm
Wooden case dimension: WxDxH (100 mm = 3.93 inch.)	mm	mm
Std. gross weight (1 Kg = 2,205 lb)	348 Kg (767 lb)	368 Kg (811 lb)
Std. packaging volume	2,3 m³ (81.2 ft³)	2,3 m³ (81.2 ft³)
STD. packed machines in to 20' container	10 pz	10 pz
STD. packed machines in to 40' container	22 pz	22 pz
INSTALLATION DATA		
Heating elements (standard - optional)	3 x 1,5 = 4,5 kW (standard) - 3 x 2,0 = 6 kW (optional)	
Installation power (standard - optional)	6,85 kW (std.) - 8,35 kW (opt.)	
Current 3ph380V-480V(+N) / 3ph220V-240V / 1ph230V	8 / 13 / 23 A (std.) - 10 / 15 / 25 A (opt.)	
Cable section	1,5 / 2,5 / 6 mm²	

Larghezza / *Width*

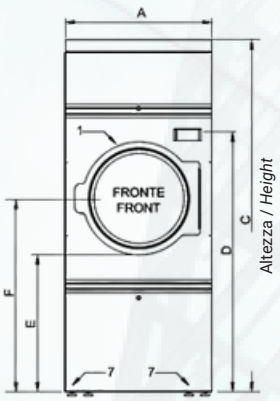

Profondità / *Depth*

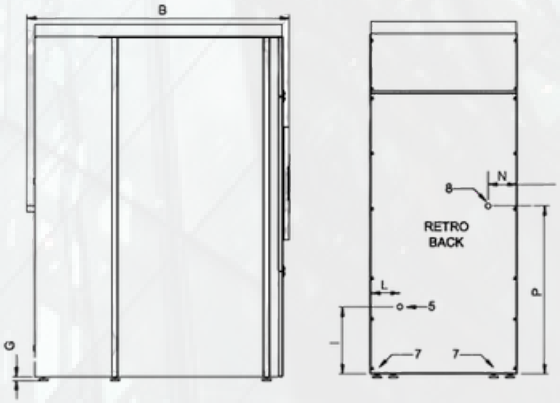

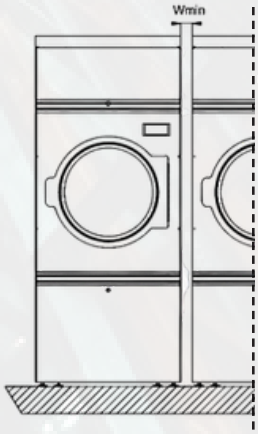

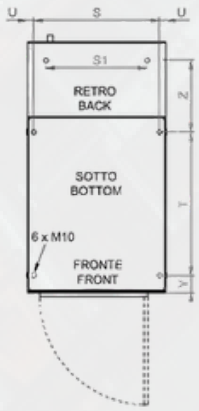

mm	A	B	C	D	E	F	G	I	L	N	P	R	S	S1	T	U	V	W_{min}	Y	X_{min}	Z
GL ES 14	791	1284	1846	1358	691	971	15÷20	80	398	84	815	1666	714	660	654	38,5	560	10	92	500	388
GL ES 18	791	1451	1846	1358	691	971	15÷20	80	398	84	815	1666	714	660	654	38,5	560	10	92	500	388

KINGSTAR SERIES
INDUSTRAIL DRYER
CLM

The **Kingstar** electric **industrial dryer** is suitable for hotel laundries, hospital laundries, and self-service laundromats. It can handle large loads of linens in a single cycle and offers fast drying speeds.

MODELS
1. SDR- 2040
2. SDR- 2060
3. SDR- 2100



TOUCH SCREEN
- Equipped with a 10-inch full-color touchscreen, the system offers 99 built-in, customizable drying programs tailored to various fabric types and load sizes—delivering flexible,user-friendly operation.

HIGH EFFICIENCY
- The 100kg dryer can directlyload 100kg of towels, with a steam pressure of over 5kg, drying within 40minutes, ensuring high efficiency and speed.

FEATURES
- Intelligent washing process Extreme care for delicate garments. Safe washing.
- 10 rpm minimum rotation speed.
- Intelligent Washing System

OPTIMIZED DESIGN
- Features an upper and lower door opening design with a door diameter of 1 meter, making loading and unloading towels effortless and time-saving.
- Offers three heating methods: steam heating, electricheating,and gas heating.

LOADING CAPACITY DESIGN
- Designed with a 1:20 loading capacity ratio, the inner drum is made of 304 stainless steel material.

OTHERS
- Utilizing real-time moisture monitoring, the system automatically adjusts drying duration to prevent over-drying, protect fabric integrity, and improve energy efficiency.

FEATURES



- Inner drum mesh is designed with 3mm bore diameter , effectively improve the washing rate of clothes, and do not hang zipper, buttons, etc.



- Electric components are all famous brands.The inverter is customized by Mitsubishi.



- The main transmission uses a 3 bearing design, which is high in strength, which can ensure 10 years maintenance free.

INDUSTRIAL DRYER
DATA SHEET

Specification Model	SDR-2040	SDR-2060	SDR-2100
Drum Diameter （mm)	1140	1260	1460
Drum Depth （mm)	875	980	1200
VOLUME （L)	800	1220	2000
VOLUME Load Ratio	20	20	20
Main Motor Power （kW)	1.1	1.5	2.2
Fan Motor Power （kW)	2.2	3	5.5
Rated Voltage （v)	380	380	380
Heater Power （kW)	36	48	81.6
Steam Pressure(MPa)	0.6	0.6	0.6
Width （mm)	1360	1480	1680
Depth （mm)	1580	1765	2025
Height （mm)	1955	2115	2355
Weight （Kg)	1000	1150	1400



Front side

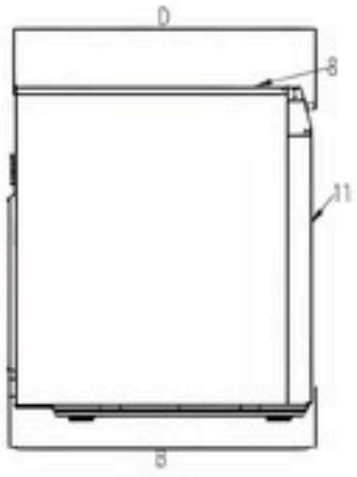

Right side

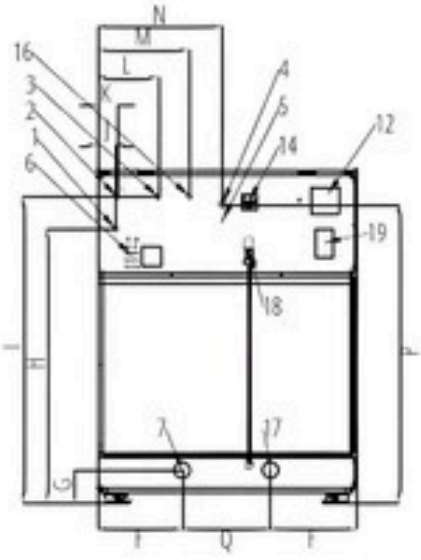

Rear side

1. Steam Inlet
2. Hot Water
3. Cold Water
4. Electrical Connection
5. Grounding Connection
6. Liquid Detergent Connection and Breather
7. Drain
8. Detergent Dispenser
9. Control Panel
10. Emergency Stop Button
11. Door Handle
12. Electric Cabinet Cooling Fan Filter
13. USB Port
14. Power Switch
15. Status Light
16. 3rd Water Inlet
17. Water Recycle
18. Sampling Hose
19. Serial Plate

KINGSTAR SERIES
COMMERCIAL DEYER
CLM

Introducing the latest innovation in industrial drying technology- **Commercial Dryer**. This high-performance industrial dryer is designed to meet the stringent requirements of commercial and industrial laundry facilities.



TOUCH SCREEN
- Equipped with a 10-inch full-color HD touchscreen, it includes 99 built-in editable automatic programs, allowing selection based on different clothes and linens.

MODELS
1. SDR- 2015
2. SDR- 2020
3. SDR- 2025

HIGH EFFICIENCY
- Offers three heating methods: steam heating, electric heating, and gas heating.

FEATURES
- Features a high-power heating system with an added insulation layer on the outer cylinder, ensuring quick temperature rise, good insulation effect, and improved drying efficiency.

OPTIMIZED DESIGN
- The wet washing technology has gradually become mainstream and intelligent wet cleaning will gradually replace the dry cleaning type.

LOADING CAPACITY DESIGN
- Designed with a 1:18 loading capacity ratio, the inner drum is made of 304 stainless steel material with a large door design, making it convenient for loading and unloading clothes.

OTHERS
- Utilizing real-time moisture monitoring, the system automatically adjusts drying duration to prevent over-drying, protect fabric integrity, and improve energy efficiency.

FEATURES



- Inner drum mesh is designed with 3mm bore diameter , effectively improve the washing rate of clothes, and do not hang zipper, buttons, etc.



- Electric components are all famous brands.The inverter is customized by Mitsubishi.



- The main transmission uses a 3 bearing design, which is high in strength, which can ensure 10 years maintenance free.

COMMERCIAL DRYER
DATA SHEET

Specification Model	SDR-2015	SDR-2020	SDR-2025
Drum Diameter （mm)	750	850	850
Drum Depth （mm)	680	640	800
VOLUME （L)	300	400	453
VOLUME Load Ratio	0.055555556	0.055555556	18
Main Motor Power （kW)	0.37	0.55	0.75
Fan Motor Power （kW)	0.37	0.55	0.55
Rated Voltage （v)	380	380	380
Heater Power （kW)	13.5	18	22.5
Steam Pressure(MPa)	0.6	0.6	0.6
Width （mm)	850	900	890
Depth （mm)	1200	1200	1420
Height （mm)	1600	1700	1805
Weight （Kg)	220	250	500



Front side

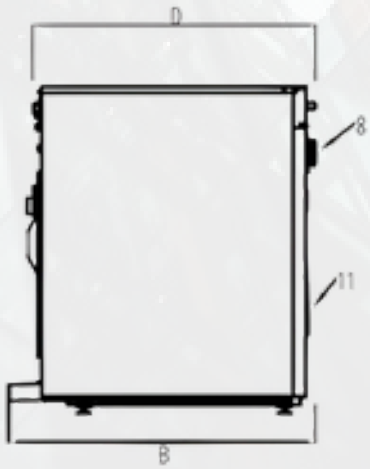

Right side

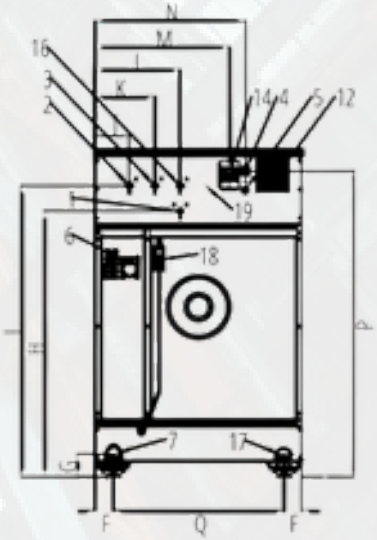

Rear side

1. Steam Inlet
2. Cold Water
3. Hot Water
4. Electrical Connection
5. Grounding Connection
6. Liquid Detergent Connection and Breather
7. Drain
8. Detergent Dispenser
9. Control Panel
10. Emergency Stop Button
11. Door Handle
12. Electric Cabinet Cooling Fan Filter
13. USB Port
14. Power Switch
15. Status Light
16. 3rd Water Inlet
17. Water Recycle
18. Sampling Hose
19. Serial Plate

KINGSTAR SERIES
INDUSTRIAL FORWARD TILTING DEYER
CLM

The Kingstar Electric Dryer is designed for high-efficiency use in hotel, hospital, and self-service laundries. With a 100kg capacity and drying time of just 40 minutes, it offers fast performance.

MODELS
1.SDR- 2100T



TOUCH SCREEN
- Equipped with a 10-inch full-color HD touchscreen, it includes 99 built-in editable automatic programs, allowing selection based on different clothes and linens.

HIGH EFFICIENCY
- The 100kg dryer can directly load 100kg of towels, with a steam pressure of over 5kg, drying within 40 minutes, ensuring high efficiency and speed.

FEATURES
- Intelligent control of drying time, accurately controlling the moisture level of the linens to prevent over-drying and potential damage to the clothes while reducing energy consumption.

HEATING DESIGN
- Features a high-power heating system with an added insulation layer on the outer cylinder, ensuring quick temperature rise, good insulation effect,and improved drying efficiency.

LOADING CAPACITY DESIGN
- Designed with a 1:20 loading capacity ratio, the inner drum is made of 304 stainless steel material.

OTHERS
- The drum is made of durable 304 stainless steel, and the 1-meter door design ensures easy loading and unloading.

FEATURES



- Inner drum mesh is designed with 3mm bore diameter , effectively improve the washing rate of clothes, and do not hang zipper, buttons, etc.



- Electric components are all famous brands.The inverter is customized by Mitsubishi.



- The main transmission uses a 3 bearing design, which is high in strength, which can ensure 10 years maintenance free.

INDUSTRIAL FORWARD TILTING DEYER
DATA SHEET

Specification Model	SDR-2100T
Drum Diameter （mm)	1460
Drum Depth （mm)	1200
VOLUME （L)	2000
VOLUME Load Ratio	20
Main Motor Power （kW)	2.2
Fan Motor Power （kW)	5.5
Rated Voltage （v)	380
Heater Power （kW)	81.6
Steam Pressure(MPa)	0.6
Width （mm)	1750
Depth （mm)	2120
Height （mm)	2500
Weight （Kg)	1800

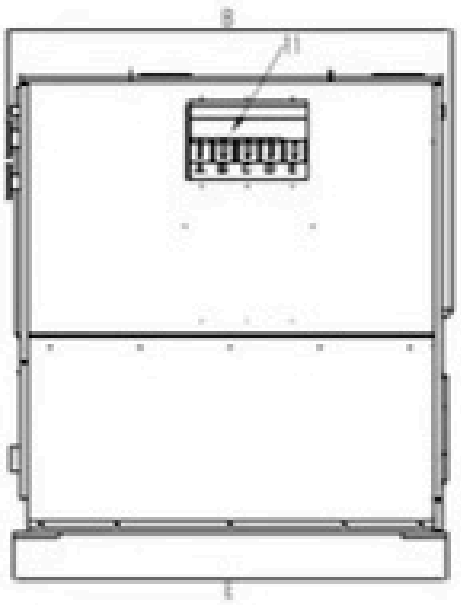

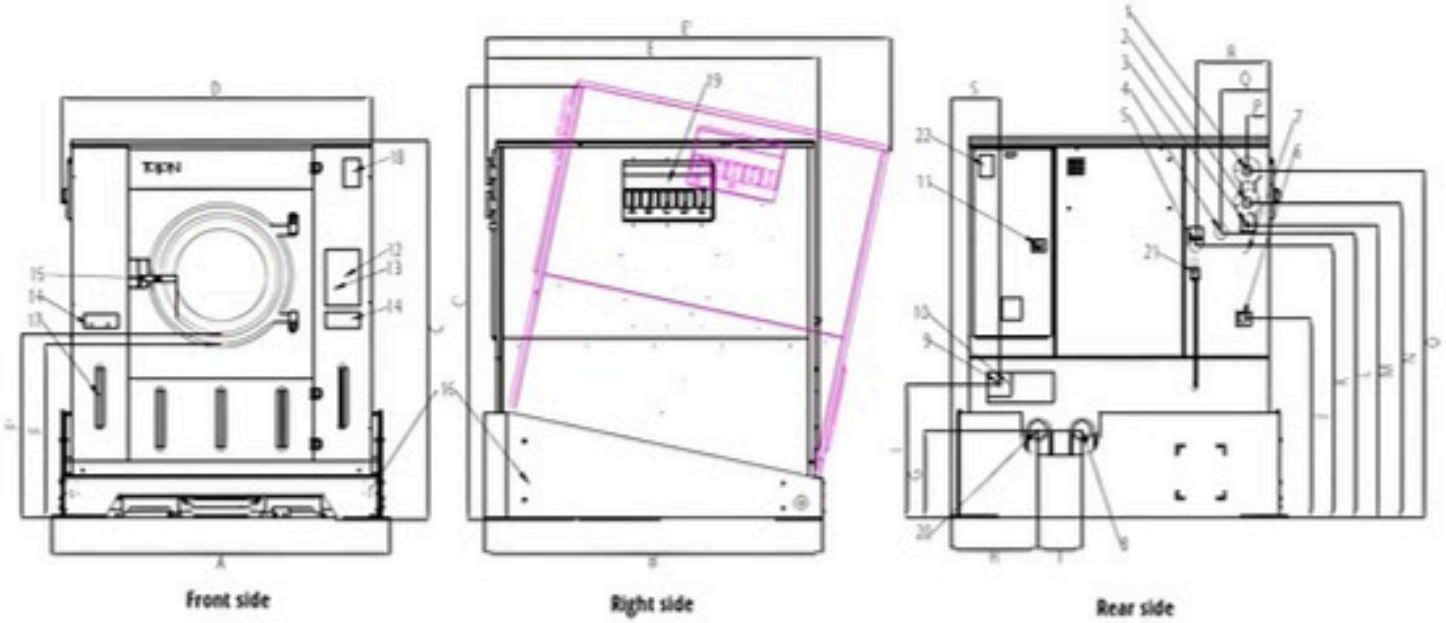

Front side

Right side

Rear side

1. Cold Water
2. Hot Water
3. Water Inlet (for detergent)
4. Liquid Detergent
5. Breather
6. Steam Inlet
7. Air Preparation
8. Drain
9. Electrical Connection
10. Grounding Connection
11. Power Switch
12. Control Panel
13. USB Port
14. Emergency Stop Button
15. Door Handle
16. Tilting System
17. Bumper
18. Status Light
19. Detergent Dispenser
20. Water Recycle
21. Sampling Hose
22. Serial Plate

TRANSFER DRYER SERIES
TRANSFER DRYER XR 60-150KG
JENSEN

The new XR dryer is scheduled to become the new Xpert in drying technology. The new X Flow feature ensures a 10–15 % higher evaporation capacity and optimizes the heat distribution for an even and fast drying process.



MODELS
1. XR 60
2. XR 90
3. XR 130
4. XR 150

RESOURCES SAVING DESIGN
- The new automatically controlled circulation flap continuously regulates the optimal ratio between the fresh air and the circulating air depending on the degree of dryness of the goods and the individually adjusted program.

HIGH EFFICIENCY
- 10-20 seconds faster unloading with AirWave through a wider unloading opening.
- More perforation of the drum for optimized airflow.

FEATURES
- 10-15% higher evaporation capacity thanks to air flow with XFlow
- Big cakes from our SHD presses producing 51 inch (1300 mm) diameter cakes will fit in the XR 90 and up dryers
- Drum design optimized for best airflow and highest drying performance.

OPTIMIZED DESIGN
- Wheels with better protection against hot air (40°C vs. 120°C, 104 °F vs. 248 °F).
- Horizontal fan position to protect vital components.

MAINTENANCE
- The low-maintenance direct drive of the JENSEN DT dryer, already proven in practice thousands of times over, was chosen for the drive of the drum. Unlike conventional systems, a check or tensioning of toothed belts or chains is not necessary.

OTHERS
- The large drum diameter enables an optimal fall curve and guarantees an outstanding air flow through the linen. The blow-out unloads the linen very quickly with a nice and fluffy result so that finishing quality is improved considerably by preventing wrinkling and tangling.

FEATURES



- The drive wheels are now being protected directly from the hot air stream.

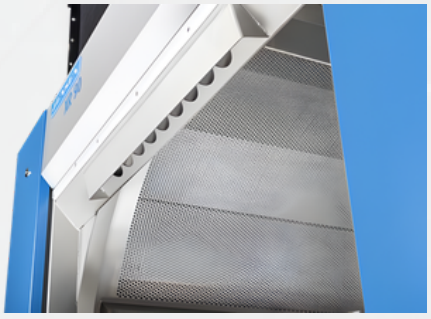

- The new X Flow ensures a 10–15 % higher evaporation capacity by producing an optimized air flow through new front air channels.



- The new horizontal fan, a new perforation pattern and the new front air flow by an amazing 20 %.

TRANSFER DRYER XR 60-150KG
DATA SHEET

MODELS	UNIT	XR 60	XR 90	XR 130	XR 150
Drum					
Capacity	KG	60	90	130	150
Drum Diamater	mm	1340	1340	1400	1500
Drum Depth	mm	1000	1500	2000	2200
Drum Volume	mm	1500	2200	3000	3500
Motor & Drive System					
Drum Drive Motor	kW	2.2 - 5.5			
Fan Motor	kW	3 - 11			
Drive Type		Direct Drive / Frequency Controlled (VFD)			
Rotation		Reversing (bi - directional)			
Electrical Data					
Power Supply	V	400 - 415 V / 3 Phase / 50 HZ			
Installed Power	kW	15 - 20	20 - 25	25 - 35	30 - 40
Control		PLC + Touchscreen HMI			
Heating System					
Steam	kg/hr	80 - 100	110 - 140	160 - 200	200 - 250
Steam Pressure	bar	4 - 8			
Steam Inlet Diameter	DN	32	40	50	50 - 65
Airflow System					
Air Flow Rate	m3/hr	4000 - 5000	6000 - 8000	8000 - 10000	10000 - 12000
Air Recirculation		Motorized recirculation flap (energy saving)			
Water / Drain					
Condensate Outlet	DN	25 - 40			
Drain Type		Steam Condensate Discharge			
Energy Consumption					
Electrical Consumption	kWh / kg liner	0.8 - 1.5			
Thermal Efficiency		High Efficiency Airflow + heat recovery			
Dimensions and Weight					
Length	mm	2300	2600	3000	3200
Width	mm	1400	1500	1600	1700
Height	mm	1700	1800	2000	2100
Weight	Kg	1500	1800	2200	2600

TRANSFER DRYER SERIES
TRANSFER DRYER DT PLUS
JENSEN

- The new DT Plus Transfer Dryers combine DT design with WR technology. 5-10 % lower energy consumption compared to DT series.

MODELS
1. DT- PLUS



RESOURCES SAVING DESIGN
- High drum volume with large perforated surface for optimized air flow and high evaporation performance.
- More consistent and batch related drying process.

HIGH EFFICIENCY
- Consistent drying results thanks to an even heat distribution in the drum ensures more operational safety.

FEATURES
- The infrared control, the drying process is optimized even further: Both the energy consumption and the drying time is reduced, since the linen temperature is the regulating variable and not the exhaust air temperature.

OPTIMIZED DESIGN
- The new DT Plus Transfer Dryers combine DT design with WR technology. 5-10 % lower energy consumption compared to DT series.

MAINTENANCE
- The low-maintenance direct drive of the JENSEN DT dryer, already proven in practice thousands of times over, was chosen for the drive of the drum. Unlike conventional systems, a check or tensioning of toothed belts or chains is not necessary.

OTHERS
- The large drum diameter enables an optimal fall curve and guarantees an outstanding air flow through the linen. The blow-out unloads the linen very quickly with a nice and fluffy result so that finishing quality is improved considerably by preventing wrinkling and tangling.

FEATURES

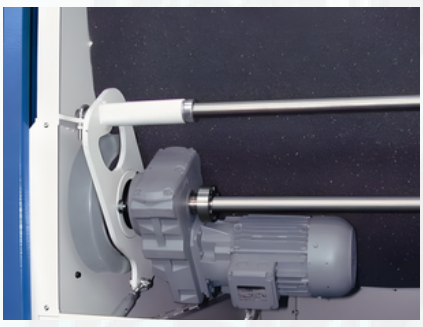

- Direct drive concept for the drum for highest operational safety and best maintainability.



- Longer life time of drive and fan motors by frequency controlled operation.

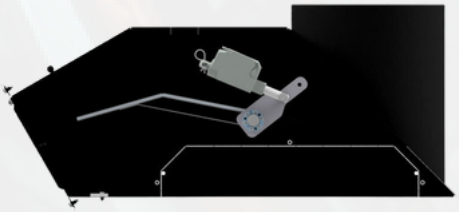

- New air flow management similar to WR dryers with motorized recirculation flap resulting in 5-10 % lower energy consumption compared to DT series.

TRANSFER DRYER SERIES
TRANSFER DRYER WR 60-120
JENSEN

The WR dryers give the word "efficiency" a completely new dimension. Their sophisticated design enables approximately 10% higher evaporation performance and approximately 10–15% lower energy consumption compared to conventional dryers.

MODELS
1. WR- 60KG
2. WR- 120 KG



RESOURCES SAVING DESIGN
- The WR dryers are very well sealed to prevent the ingress of air. The excellent insulation also ensures low heat emission and a low noise level.

OPTIMAL AIRFLOW
- Newly developed, frequency-controlled high-performance fans and an optimized drum geometry improve airflow and heat distribution within the drum.

FEATURES
- The new automatically controlled recirculation flap continuously regulates the optimal ratio between fresh air and recirculated air volume, depending on the dryness level of the laundry and the individually selected program.

OPTIMIZED DESIGN
- The large diameter of the drum enables an optimal trajectory and guarantees excellent airflow through the laundry.
- This significantly improves the finish quality, as creasing or tangling of large laundry items is prevented.

MAINTENANCE
- The low-maintenance direct drive of the JENSEN dryer, already proven in practice thousands of times over, was chosen for the drive of the drum.

OTHERS
- Gentler treatment of the linen for a longer linen lifetime.
- Less wrinkling for a higher finish quality.
- Less tangling for a faster handling after the drying process.
- Faster unloading thanks to the shorter drum.

FEATURES

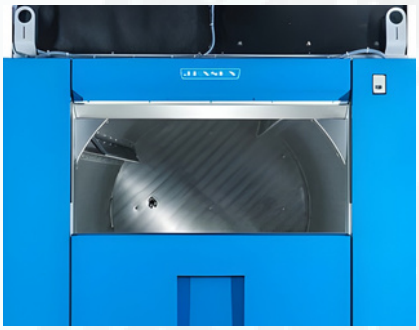

- Large drum diameter for optimal drop curve and excellent finish quality.



- WR 120 with integrated, easily accessible heat exchangers.

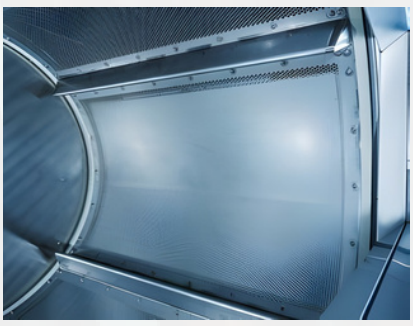

- Inner drum with segmented sheets.

TRANSFER DRYER WR 60-120
DATA SHEET

MODELS	UNIT	WR60	WR120
Drum			
Capacity	KG	60	120
Drum Diamater	mm	1600	1600-1800
Drum Depth	mm	800-900	1200-1400
Drum Volume	mm	1600	3000
Motor & Drive System			
Drum Drive Motor	kW	3 - 7.5	
Fan Motor	kW	5.5 -15	
Drive Type		Direct Drive / Frequency Controlled (VFD)	
Rotation		Reversing (bi - directional)	
Electrical Data			
Power Supply	V	400 - 415 V / 3 Phase / 50 HZ	
Installed Power	kW	20 - 30	30 - 45
Control		PLC + Touchscreen HMI	
Heating System			
Steam	kg/hr	120-160	200-280
Steam Pressure	bar	4 - 8	
Steam Inlet Diameter	DN	32	40
Airflow System			
Air Flow Rate	m3/hr	6000-8000	10000 - 14000
Air Recirculation		Motorized recirculation flap (energy saving)	
Water / Drain			
Condensate Outlet	DN	DN32-DN40	
Drain Type		Steam Condensate Discharge	
Energy Consumption			
Electrical Consumption	‹Wh / kg liner	0.7 - 1.3	
Thermal Efficiency		High Efficiency Airflow + Insulation	
Dimensions and Weight			
Length	mm	2500	3200
Width	mm	1600	1800
Height	mm	1900	2200
Weight	Kg	1800	2800

TUMBLER DRYER SERIES
TRANSFER DRYING TUMBLER DT 60- 240
JENSEN

The batch transfer drying tumblers are designed for the fully automatic shaking as well as pre- and full drying of water extracted linen batches. It is also possible to operate the dryers as an isolated application without a direct connection to other machines.

MODELS
1. DT- 60 KG
2. DT- 90 KG
3. DT- 120 KG
4. DT- 140 KG
5. DT- 190 KG
6. DT- 240 KG



RESOURCES SAVING DESIGN
- Each dryer has its own switch panel with PLC control and own power supply. The operation and programming of the dryer is carried out by a separate compound control that connects all dryers with each other.

OPTIMAL AIRFLOW
- VacuTrans was developed to transport con- ditioned linen within the laundry by means of a pipe system in a fast, economic and space-saving way.

FEATURES
- The new automatically controlled recirculation flap continuously regulates the optimal ratio between fresh air and recirculated air volume, depending on the dryness level of the laundry and the individually selected program.

OPTIMIZED DESIGN
- High drum volume with large perforated surface for optimized air flow and high evaporation performance.
- Frequency controlled regulation of the drum rotation speed, dependent on the program.

MAINTENANCE
- The low-maintenance direct drive of the JENSEN dryer, already proven in practice thousands of times over, was chosen for the drive of the drum.

OTHERS
- Cool-down via partially opened loading door or fresh air flap.
- Air recirculation device for heat recovery (standard for gas heated dryers).
- Infrared control InfraCare to optimize the drying process.
- Temperature control with motor control.

FEATURES



- Single dryer with loading belt.



- Vacuum loading through the unloading door of the dryer with the VacuTrans system.

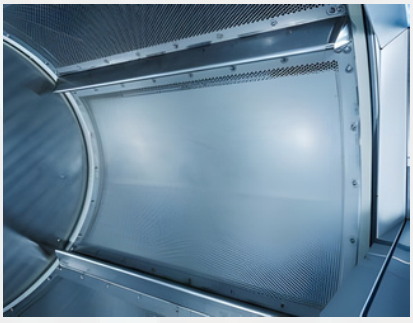

- Inner drum with segmented sheets.

TRANSFER DRYING TUMBLER DT 60- 240
DATA SHEET

Description	UNIT	DT 60	DT 90	DT 120	DT 140	DT 190	DT 240
Drum							
Capacity	KG	60	90	120	140	190	240
Drum Diamater	mm	-	-	-	-	-	-
Drum Depth	mm	-	-	-	-	-	-
Drum Volume	mm	-	-	-	-	-	-
Motor & Drive System							
Drum Drive Motor	kW	2.2 - 11 KW					
Fan Motor	kW	3 - 18.5 KW					
Drive Type	-	Belt or Direct (model dependent)					
Rotation	-	Reversing					
Electrical Data							
Power Supply	V	400 - 415V / 3ph/ 50 hz					
Installed Power	kW	12 - 18kw	18 - 25	22 - 30	25 - 35	30 - 45	40 - 55
Control		PLC /Microprocessor					
Heating System							
Steam	kg/hr	80 - 100	110 - 140	140 180	160 - 200	200 - 260	260 - 320
Steam Pressure	bar	4 - 8 bar					
Airflow System							
Air Flow Rate	m3/hr	4000 - 5000	6000 - 7500	7000 - 9000	8000 - 10000	10000 - 13000	12000 - 16000
Water / Drain							
Condensate Outlet	DN	condensate Discharge					
Drain Type		lint filtration system included					
Energy Consumption							
Electrical Consumption	kWh / kg linen	0.9 - 1.6					
Thermal Efficiency		standard Industrial					
Dimensions and Weight							
Length	mm	1800	2000	2200	2400	2800	3200
Width	mm	1200	1300	1400	1500	1600	1800
Height	mm	1700	1800	1900	2000	2100	2200
Weight	Kg	1200	1500	1800	2000	2200	3000

STAND ALONE SERIES
TUMBLE DRYER- JTD 28-110 KG
JENSEN

The JENSEN tumble dryers are a perfect complement to increase the laundry's flexibility towards their end-customers, and offer the best solution to their users of the linen.

MODELS
1. JTD -28 KG
2. JTD -40KG
3. JTD -60KG
4. JTD -110KG



RESOURCES SAVING DESIGN
- The compact dimensions allow a placement in very tight spaces. This saves room for other operations. With a range of four different load sizes, the JENSEN tumble dryers can meet individual requirements.

OPTIMAL AIRFLOW
- The humidity sensor ensures the perfect humidity for all linen that needs to be ironed, thus ensuring a perfect finishing touch.

FEATURES
- Efficient use of heating.
- More heat transferred to the drying with the specially designed large heat transfer surface.
- Heating with steam, electricity or gas
- Fully insulated machine with constant two way spin (reversing standard).

OPTIMIZED DESIGN
- The stainless steel drum is a standard. On top of that, all components in the JENSEN tumble dryers are galvanized and ensure a long lifetime.
- The well-thought-out design and the use of advanced materials ensure longevity and a cost-efficient operation.

MAINTENANCE
- The low-maintenance direct drive of the JENSEN dryer, already proven in practice thousands of times over, was chosen for the drive of the drum.

OTHERS
- Easy-access service doors and visible pulley enables preventive maintenance.
- Hinged filter door facilitates access for cleaning and maintenance.
- Bearing house with lubrication ports on all JTD Dryers.
- Lubrication needs to be done every 3 – 5 years only.

FEATURES



- Fast loading and unloading with wide hatch, sliding doors.



- Remote awareness and user-friendly diagnostics function: Instant overview of machine status with the smart indicator light.



- Easy lint removal with the easy-to-access air filters.

STAND ALONE SERIES
L-TRON DTX TUMBLING DRYER
JENSEN

The L-Tron DTX range of tumble dryers is designed for either stand-alone operation or to work as part of a fully automated wash aisle being fed either by a shuttle conveyor or a vacuum system.

MODELS
1. JTD -28 KG
2. JTD -40KG
3. JTD -60KG
4. JTD -110KG



RESOURCES SAVING DESIGN
- The compact dimensions allow a placement in very tight spaces. This saves room for other operations. With a range of four different load sizes, the JENSEN tumble dryers can meet individual requirements.

OPTIMAL AIRFLOW
- The DTX Dryers use an axial airflow that delivers the incoming air through the front and back of the basket rather than through the basket perforations.

FEATURES
- The automatic blow down lint filter has the following features:
- Stainless steel lint screen
- Sealed rotor bearings
- Lint is collected in a large, light weight

OPTIMIZED DESIGN
- The complete dryer assembly is mounted on a single steel sub-frame to ensure the correct alignment between components.
- Both front and rear doors slide vertically in a guide system designed to allow lateral door move- ment.

MAINTENANCE
- Ease of maintenance was an important consideration in the development of the DTX Dryers and so the following features are included on ALL models as standard; • Direct drive – no belts • Central lubrication points • Swing out blower • Removable panels • Teflon basket seals • Easy access burner mounting • No wipers • Hinged lint screen access door.

OTHERS
- Shuttle conveyor option provides a safe and flexible method of unloading open pocket washer/extractors, and loading of dryers.
- It allows for the staging of a load of goods in anticipation of the next available dryer.

FEATURES

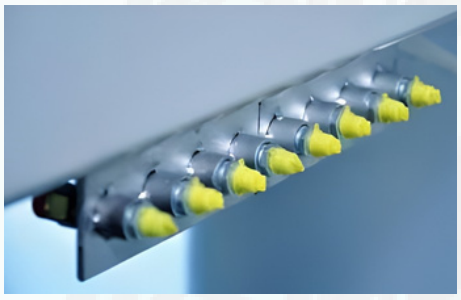

- Central lubrication point

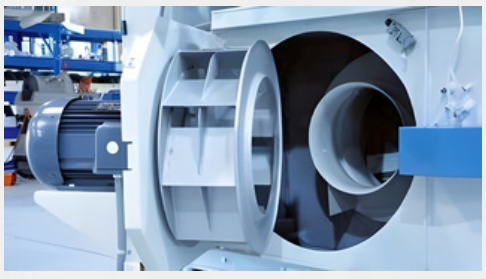

- Swing out blower



- Direct drive – no belts

DRY CLEANING MACHINES

Dry cleaning machines are designed to deliver superior fabric care with advanced cleaning technology. Built for efficiency and reliability, they ensure excellent results while protecting delicate garments. Ideal for professional dry cleaning businesses and textile care facilities.



DRY CLEANING MACHINES
VORTEX SERIES
FIRBIMATIC

VORTEX Firbimatic always on the cutting edge of development has designed and engineered another innovative breakthrough in state of the art perchloroethylene dry cleaning machine technology. The new Vortex™ series machines are available in models ranging from 18 kg./40lbs. to 40 kg./ 95lbs. loading capacity.

MODELS
1. S/L 2018
2. S/L 2020
3. S/L 2025
4. L 2032
5. L 2040



HIGHLIGHTS

- The new Vortex range, always at the forefront of technology and continuously researching new solutions, features a revolutionary system capable of exceptionally reducing drying times thanks to a unique and special drying chamber and a particular positioning of the drying fan.
- Vortex technology greatly increases the induction flow of both air and solvent vapor into the recovery chamber resulting in overall shorter cycle times, promoting both increased garment cleaning production in less time and increased profitability.
- **MAXFLOW AUTOMATIC LINT SCREEN WASH DOWN** To assure maximum performance of the Vortex drying system Firbimatic machines automatically wash down the lint build up on the lint screen from the previous drying cycle. This means that each drying phase starts with a clean lint screen so maximum airflow is achieved, resulting in overall shorter cycle times from start to finish.

JET SPRAY

- Jet Spray is one of the latest innovations by Firbimatic.
- This allows the user to adjust the amount of mechanical action cleaning on the garments in the wheel.
- Full pressure for the garments with the most dirt or stain removal required or low pressure for moderate cleaning and can be turned off for the most delicate fragiles.

SMART

- Firbimatic has placed all this technology and performance at the touch of your fingertips with the Smart™ microprocessor.
- Features of the Smart™ include simple touch and forget controls for fully automatic operation of cleaning, drying and distillation cycles.
- Pro-Logic™ maintenance program manager will monitor all machine functions and alert the operator to any required maintenance such as cleaning of lint screens, button trap, or ecological spin filter.
- All cleaning cycles and maintenance features can be custom programmed to your requirements and stored on a Pro-Logic™ memory key for instant back up should you ever need to change or replace your custom programming.

I CONNECT

- I-Connect is an interface that allows access to your Firbimatic Smart™ D601 computer through the internet. Simply download the FMB Control app and I-Connect makes it possible to monitor and view programs, access the computer menu, create, and modify or cancel cleaning cycles in real time, just like being in front of the machine. It is also possible to download the Log file which will give you a complete report of any alarms over the past year.

COMAPTABLE ACCESSORIES



- REMOTE CONTROL of the dry cleaning machine.



- Water purification system



- Stainless steel and copper water cooler

VORTEX SERIES
DATA SHEET

Parameter	Unit	S/L2018	S/L2020	S/L2025	L2032	L2040
DRUM						
Loading Capacity	kg	18	20	25	32–34	40
Loading Capacity	lbs	40	45–50	55–60	75–80	90–95
Basket Volume	L	340	400	500	645	800
Basket Diameter	mm	900	1000	1000	1200	1200
Basket Depth	mm	535	510	640	570	710
Door Diameter	mm	500	500	500	500	500
Wash Speed	RPM	20/50	20/50	20/50	20/50	20/50
Extract Speed	RPM	200/400	200/400	200/400	200/350	200/350
TANKS						
Tank 1	L	95	120	120	240	240
Tank 2	L	150	180	180	240	240
Tank 3	L	-	-	-	330	330
STILL						
Useful Volume	L	190	190	190	360	360
Total Volume	L	225	225	225	445	455
ECO FILTER						
Volume	L	55	55	55	75	100
Filtering Surface	m^2	3.9	3.9	3.9	5.5	7.8
Discs	nr	26	26	26	39	52
DECOLORANTFILTER-PR						
Volume (L)	L	13	13	13	25	25
Tubes (nr)	nr	1	1	1	1	1
Cartridges (nr)	nr	1	1	2	2	2
DUALCARTRIDGEFILTER- KR						
Volume (L)	L	55	55	55	85	105
Tubes (nr)	nr	1	1	1	1	1
Cartridges (nr)	nr	2	2	2	3	4
POWER						
Electric	kW	29–30	32.5–34.5	32.5–34.5	46	46
Steam	kW	11–12	14.5–16.5	14.5–16.5	16.5–18.5	16.5–18.5
Air Compressor	-	1/4"	1/4"	1/4"	1/4"	1/4"
Water	-	3/4" – 1"	3/4" – 1"	3/4" – 1"	3/4" – 1"	3/4" – 1"
Steam	-	1/2"	1/2"	1/2"	1/2"	1/2"
WEIGHT						
Empty (kg)	KG	1690	1910	1970	3185	3295
With Solvent (kg)	KG	2195	2500	2520	4880	4990
Static Load (kg/m^2)	KG/m2	813	836	865	1020	1045
Dynamic Load +10% (kg/m^2)	KG/m2	1075	1290	1135	1300	1370
DIMENSIONS						
Width	mm	1250+100	1300+100	1300+100	2360+120	2360+120
Depth	mm	2160	2240	2300	2025	2025
Height	mm	2210	2340	2340	2580	2580

DRY CLEANING MACHINES
F SERIES
FIRBIMATIC

The new F line series of machines is designed to comply with the strictest environmental regulations, to achieve the best washing results with the lowest operating costs, and to simplify routine maintenance.

MODELS
1. F10
2. F12
3. F15
4. F18
5. F25



HIGHLIGHTS

- F SERIES designed to comply with strict environmental regulations to achieve ultimate cleaning results with the lowest possible operational cost,and to simplify maintenance.
- With its modern design F-Series machines offer additional advantages in operational savings as they can be equipped with many options including some more selective such as:
- **Energy Still:** 2° heat pump / integrated recovery of distillation vapor for drying that reduces energy consumption
- **Eco System:** distillation sludge drying /solvent recovery
- **Clean Still:** automatic draining of still residue with a dedicated pump.
- **Integrated Coalperc:** solvent absorption system to reduce perc emission at the end of cycle; and more upon request to broaden machine performance.

ECOLOGY

- The F18 and F25 are the result of the proven track record and heavy-duty operation of the F-Series in recent years, having been engineered and manufactured to offer excellent performance with particular regard to solvent vapor concentration reduction in the drum that is far below required standards.

MAINTENANCE

- A dedicated maintenance program will monitor all machine functions and alert the operator of any required maintenance procedures including the cleaning of lint screens, button trap or ecological spin filters. All cleaning cycles and maintenance features can be custom programmed for your requirements and stored on a memory key for instant back up should the need ever arise to change or replace the custom programming. With the Memory Card it is now possible to upgrade software, display the computer in a wide variety of languages, memorize the different programs and specific parameters that can be easily transferred from machine to machine or downloaded into a laptop computer.

I CONNECT

- On the F-Series the interface I-Connect option allows access to your Firbimatic SMART™ computer via the internet. By simply downloading the FMB Control App, I-Connect makes it possible to remotely monitor and view programs, access the computer menu, create, modify or cancel cleaning cycles in real time and read a complete report of any alarms over the past year just like being in front of the machine.

COMAPTABLE ACCESSORIES



- REMOTE CONTROL of the dry cleaning machine.



- Water purification system



- Stainless steel and copper water cooler

F SERIES
DATA SHEET

TECHNICAL DATA	Unit	F10 ST2	F10 LT2	F10 LT3	F12 ST2	F12 LT2	F12 LT3	F15 ST2	F18	F25
DRUM										
Loading capacity	kg	10	10	10	12	12	12	15	15	15
Loading capacity	lbs	25	25	25	28	28	28	35	35	35
Basket volume	L	200	200	200	221	221	221	285	285	285
Basket diameter	mm	700	700	700	800	800	800	800	800	800
Basket depth	mm	500	500	500	440	440	440	560	560	560
Door diameter	mm	350	350	350	500	500	500	500	500	500
Wash speed	RPM	20/50	20/50	20/50	20/50	20/50	20/50	20/50	20/50	20/50
Extract speed	RPM	200/400	200/400	200/400	200/450	200/450	200/450	200/450	200/450	200/450
TANKS										
Tank 1	L	75	75	75	85	85	85	105	105	105
Tank 2	L	75	75	75	85	85	85	105	105	105
Tank 3	L	–	–	120	–	–	120	–	–	120
STILL										
Useful volume	L	84	145	145	144	145	145	144	145	145
Total volume	L	100	180	180	164	180	180	164	180	180
ECO FILTER										
Volume	L	35	35	35	35	35	35	35	35	35
Filtering surface	m²	2.1	2.1	2.1	2.1	2.1	2.1	2.1	2.1	2.1
Discs	nr	14	14	14	14	14	14	14	14	14
DECOLORANTFILTER- PR										
Volume	L	13	13	13	13	13	13	13	13	13
Tubes	nr	1	1	1	1	1	1	1	1	1
Cartridges	nr	2	2	2	2	2	2	2	2	2
CARTRIDGE FILTER - KR										
Volume	L	35	35	35	35	35	35	35	35	35
Tubes	nr	1	1	1	1	1	1	1	1	1
Cartridges	nr	1	1	1	1	1	1	1	1	1
POWER										
Electric version	kW	14	15.5	15.5	16.5	16.5	16.5	16.5	16.5	16.5
Steam version	kW	4.5	4.5	4.5	5.5	5.5	5.5	5.5	5.5	5.5
CONNECTIONS										
Air compressor		1/4"	1/4"	1/4"	1/4"	1/4"	1/4"	1/4"	1/4"	1/4"
Water		3/4"	3/4"	3/4"	3/4"	3/4"	3/4"	3/4"	3/4"	3/4"
Steam		1/2"	1/2"	1/2"	1/2"	1/2"	1/2"	1/2"	1/2"	1/2"
WEIGHT										
Empty	kg	980	1090	1110	1150	1170	1190	1195	1220	1240
With solvent	kg	1332	1442	1654	1598	1618	1862	1643	1668	1912
Static load	kg/m²	870	891	891	784	768	884	807	792	908
Dynamic load (+10%)	kg/m²	1095	970	1095	1005	985	1110	1065	1045	1170
DIMENSIONS										
Width	mm	890+124	1450+154	1450+154	1000+124	1560+154	1560+154	1000+124	1560+154	1560+154
Depth	mm	1950	1380+60	1380+60	2200	1450+60	1450+60	2200	1450+60	1450+60
Height	mm	2045	2045	2045	2170	2170	2170	2170	2170	2170

DRY CLEANING MACHINES
ECO GREEN SERIES
FIRBIMATIC

The Ecogreen series of machines is designed for washing with alternative solvents. EcoGreen™ models are available in both rigid and suspended basket versions, with load capacities ranging from 18 kg to 40 kg.

MODELS
1. S/L 2118
2. S/L 2120
3. S/L 2125
4. L 2132
5. L 2140



HIGHLIGHTS

- The advantage of using EcoGreen™ models lies in the flexibility of being able to use any alternative Class III solvent without having to make changes to the structure of the machines.
- To use a different alternative solvent, simply modify the washing programs in the Smart™ computer and the machine is ready for use with the new solvent.
- The **Hydro-Vac**™ two-stage fractional distillation system produces a higher-quality solvent by directing the first condensate into a primary water separator.
- Special probes allow for the automatic discharge of any water that may form during the distillation process.
- A quantity of solvent mixed with water is then introduced into the pre-wash of the next cycle to improve the removal of water-soluble stains and thus achieve excellent cleaning results.

SECURE-LOCK™ DOOR LOCKING SYSTEM

- With Safety (gives you peace of mind with Secure-Lock™ door locking system.
- The Smart™ microprocessor works in conjunction with the door locking system to assure the operator that every door on the EcoGreen™ Series is closed and secure before allowing the machine to start the cycle.

MAINTENANCE

- JET SPRAY is one of the innovations by Firbimatic.
- This allows the user to adjust the amount of mechanical action cleaning on the garments in the wheel.
- Full pressure for the garments with the most dirt or stain removal required or low pressure for moderate cleaning and can be turned off for the most delicate fragile.

I CONNECT

- I connect is a display that allows access to your Firbimatic :Smart D602 computer through the internet. Simply download the FMB Control app and I-Connect makes it possible to monitor and view programs, access the computer menu, create, and modify or cancel cleaning cycles in real time, just like being in front of the machine. It is also possible to download the log files.

COMAPTABLE ACCESSORIES



- REMOTE CONTROL of the dry cleaning machine.



- Water purification system



- Stainless steel and copper water cooler

ECO GREEN SERIES
DATA SHEET

TECHNICAL DATA	Unit	S218	S220	S225	L218	L220	L225	L232	L240
DRUM									
Loading Capacity	kg	18	20	25	18	20	25	32	40
Basket Volume	L	360	400	500	360	400	500	720	800
Basket Diameter	mm	900	1000	1000	900	1000	1000	1200	1200
Basket Depth	mm	360	510	500	360	510	500	720	720
Door Diameter	mm	500	500	500	500	500	500	600	600
Wash Speed	RPM	20-50	20-50	20-50	20-50	20-50	20-50	20-50	20-50
Extract Speed	RPM	300-500	300-500	300-500	300-500	300-500	300-500	300-500	300-500
TANKS									
Tank 1	L	150	180	180	150	180	180	240	240
Tank 2	L	63	110	110	63	110	110	200	200
Parameter									
Volume	L	190	190	190	190	190	280	360	360
ECOFILTER									
Volume	L	55	55	55	55	75	75	100	100
Filtering Surface	m^2	42	42	42	42	59	59	84	84
Discs	nr	26	26	26	26	39	39	52	52
WEIGHT									
Empty	kg	1801	1820	1900	1801	1820	1900	2800	2800
With Solvent	kg	1834	2090	2185	1834	2090	2185	3620	3620
DIMESNSIONS									
Width	mm	1300	1300	1300	1300	1300	1300	2360	2360
Depth	mm	1950	2200	2300	1950	2200	2300	2025	2025
Height	mm	1350	2170	2300	1350	2170	2300	2580	2580

IRONING TABLES

Professional ironing tables crafted for precision and comfort, making every garment finish flawless. Durable, ergonomic, and built to handle heavy-duty use in commercial laundries and dry cleaning facilities.



IRONING TABLES TP without BOILER SERIES
TP-A / TP-BA / TP-VBA
DANUBE

TP ironing tables **without** Boiler has various models. Each model has been designed to meet the requirements of perfection, efficiency and flexibility specific to each sector and each need. Industrial ironing tables can be supplied in a self-contained version, with an integrated steam boiler, or ready for connection to an external steam supply.



TP-A

- Models equipped with built-in vacuum unit, without electric boiler (to be connected to central steam supply):
- Vacuum ironing table + iron, with electrically heated board and suction.
- Adjustable temperature of board by means of a thermostat.
- Built-in single phase suction unit.
- **Board dimensions:** 1.200 x 400 x 250 mm
- Works by means of pedal.
- Automatic water feeding and pressure control
- Water pump
- To be connected to external steam supply.
- Adjustable height of board for model TF-AS from 750 to 950 mm.
- **TP-A:** Heated and vaccum table



TP-BA

- **TP-BA** Vacuum and blowing ironing table without boiler (TP).
- Utility vacuum and blowing tables with electrically heated board.
- Board temperature adjustable by thermostat
- Built-in single phase vacuum and blowing unit
- **Board dimensions:** 1200 x 400 x 250 mm
- Adjustable height of board from 750 to 950 mm
- Feeding pump and steam iron
- **Needs compressed air:** consumption 5 Nl/min



TP-VBA

- **TP-VBA** Vacuum, up-steaming and blowing ironing table without boiler (TP).
- Up-steaming, vacuum and blowing tables with electrically heated board.
- Adjustable board temperature by thermostat
- Single phase vacuum and blowing unit controlled by pedal
- Feeding pump and steam iron
- **Board dimensions:** 1200 x 400 x 250 mm
- **Needs compressed air:** Consumption 5 Nl/min

IRONING TABLES TPC with BOILER SERIES
TPC-08A/TPC-A & PLUS/TPC-BA/TPC-VBA
DANUBE

TPC ironing tables **with** Boiler has various models. Each model has been designed to meet the requirements of perfection, efficiency and flexibility specific to each sector and each need. Industrial ironing tables can be supplied in a self-contained version, with an integrated steam boiler, or ready for connection to an external steam supply.



TPC-08A
- **TPC-08A** Vacuum ironing table with built-in boiler.
- Electric heated and vacuum utility board.
- Built-in electric boiler, water pump, water tank and steam iron.
- **Board dimensions:** 1100 x 380 x 270 mm.



TPC-A
- **TPC-A** Ironing table with built-in boiler and vacuum unit
- Electric heated and vacuum utility board with adjustable temperature by thermostat.
- Built-in electric boiler
- **Board dimensions:** 1200 x 400 x 200 mm



TPC-A PLUS
- **TPC-A PLUS** Ironing table with built-in boiler and vacuum unit.
- Electric heated and vacuum utility board with adjustable temperature by thermostat.
- Built-in electric boiler.
- **Board dimensions:** 1200 x 400 x 200 mm.



TPC-BA
- **TPC-BA** Vacuum and blowing ironing table with boiler.
- Utility vacuum and blowing tables with electrically heated board.
- Board temperature adjustable by thermostat.
- Built-in single phase vacuum and blowing unit.
- **Board dimensions:** 1200 x 400 x 250 mm.



TPC-VBA
- **TPC-VBA** Vacuum, up-steaming and blowing ironing table with boiler (TPC).
- Up-steaming, vacuum and blowing tables with electrically heated board.
- Adjustable board temperature by thermostat.
- Single phase vacuum and blowing unit controlled by pedal.
- Feeding pump and steam iron.
- **Board dimensions:** 1200 x 400 x 250 mm.

IRONING TABLES SUPERPLATINE SC/SD/SA/SAS/SA-TE TAS/RECORD

PONY



SUPERPLATINE SC/SD

Superplatine tables are designed for the knitwear and garment industry. Superplatine tables are available in the following models:

- **SC:** Steam heated, vacuum and up-steaming rectangular table, ready for connection to central steam. Available with either **Standard (1400x800 mm) or Maxi board (1600x850 mm).**
- **SD:** Steam heated, vacuum and up-steaming rectangular table, ready for connection to central steam. Available with either Maxi **(1600x850 mm), Large (1800x900 mm) or Extra Large board (2000x1000 mm).**



SUPERPLATINE SA/ SAS /SA-TE

Superplatine tables are designed for the knitwear and textile manufacturing industry. Superplatine SA tables are available in the following models:

- **SA:** electrically heated, rectangular vacuum table, available with either **Standard (1200x700 mm)** or **Maxi board (1600x850 mm).**
- **SA-S:** electrically heated, rectangular vacuum/air-blowing table, available with either **Standard (1200x700 mm)** or Maxi board **(1600x850 mm).**
- **SA-TE:** electrically heated, vacuum table suitable for finishing curtains. Height adjustable (four positions). **Board size: 3000x700 mm.**



TAS

- Model **TAS** is a vacuum/air-blowing ironing table, which can be equipped to iron on either side of the board.
- It features **2 casters** and adjustable board height from **830 to 950 mm.**
- Its two functions, vacuum and air-blowing, allows to steam from the iron and dry the garments at the same time with the air-blowing, for a remarkable reduction of movements and ensuring to the operator maximum efficiency and competence.



RECORD

- **RECORD** are the perfect combination of innovation and ease of use for top quality ironing and competitive prices.
- Record tables feature copious and well distributed steam from the board.
- Vacuum and air-blowing are powerful and constant; the air flow is adjustable and the optional "Energy Saver" device allows to save up to 30% steam thanks to instant steaming.
- Record is manufactured either self-contained, with 5lt (6 kW), 9lt (6 or 8 or 10 or 12 kW), 20 lt (10 or 12 kW) boiler, or for connection to central steam.

IRONING TABLES
SILVER-GENUS-VEPORETTA-CLASSIC
PONY



SILVER

Silver ironing tables are designed to allow high performance and fast production.
Available models:

- **Silver-A:** Vacuum table - available with one of the following board types: Standard, Maxi, Bottle-Neck (BN).
- **Silver-S:** Vacuum & air-blowing table - available with one of the following board types: Maxi, Bottle-Neck (BN).
- **Silver-SV:** Vacuum, air-blowing and up-steaming table - available with one of the following board types: Maxi, Bottle-Neck (BN).



GENUS

Genus ironing tables are electrically heated and display innovative aesthetic and construction features.
Model GENUS S is available as follows:

- **GENUS S** vacuum and air-blowing, with either fixed height or adjustable height (min 770mm - max 970mm - with gas springs).
- **GENUS S PLUS:** same as Genus S, with air-vent chimney with acustic insulation.
- **GENUS S-F:** same as Genus S, with COLD-ironing board made of STAINLESS STEEL, anti-condensate board and silicone pad, instead of the standard board & pad.
- **GENUS S PLUS-F:** same as S PLUS, with COLD-ironing board made of STAINLESS STEEL, anti-condensate board and silicone pad, instead of the standard board & pad.



VAPORETTA

Vacuum and up-steaming range of tables "VAPORETTA" has been appreciated and acknowledged as "historical" product in the Pony range for many years now.
Self-contained models:

- **Model VB** with board size 1200x380mm – small end 250mm, available with the following boiler capacity: 5lt (6 kW), 9lt (6 or 8 or 10 or 12 kW), 20 lt (10 or 12 kW).
- **Model VB Maxi** with board size 1300x500mm – small end 250mm, available with the following boiler capacity: 9lt (6 or 8 or 10 or 12 kW), 20 lt (10 or 12 kW).



CLASSIC

Every model in the **CLASSIC** range is electrically heated, has vacuum and is height adjustable (from 930 to 750 mm).
Classic is available in the following versions:

- **Classic 110** (board size 1100x380 mm - small end 230 mm) Ready to fit 1 arm with shape.
- **Classic 130** (board size 1300x500 mm - small end 250 mm) Ready to fit 2 arms with shapes
- **Classic R** with rectangular board shape (board size 1300 x 650 mm) Suitable for ironing on both sides of the table. Ready to fit 2 arms with shapes.

IRONING TABLES
FVC - TA - DELTA - OMEGA PRO - TPA
PONY



FVC
FVC Utility ironing tables. Solid and reliable. These tables are the "entry-level" in the range of air-blowing tables, with an excellent quality/price ratio.

FVC is available in the following versions:
- **FVC**, electrically-heated vacuum table with 5-lt built-in electronic boiler.
- **FVC-S** electrically-heated vacuum and air-blowing table, available either with 5-lt built-in electronic boiler or for connection to central steam supply.



TA
- Model TA is a solid, simple, electrically heated utility ironing table which combines quality with reliability and competitive price. Ready for connection to central steam (if supplied with steam iron assembly - GFV).



DELTA
- Electrically heated vacuum utility or rectangular ironing table (Delta-R). Ideal for domestic use, communities and as a finishing station in laundries.
- Free height adjustment from 76 to 107 cm by means of soft spring for securing the board to any requirement. Can be folded vertically to save space.



OMEGA PRO
- Electrically heated vacuum utility ironing table, also blowing on request (Omega-Pro S). Ideal for domestic use, communities and as an emergency finishing station in laundries.
- Height adjustment in 12 predetermined positions from 60 cm up to 100 cm, with mechanical locking pin



TPA
Seam opening tables with shapes. Manual adjustable height from 750 to 930 mm. The TPA features thermostatically adjustable electric board heating, powerful built-in vacuum and vacuum exhaust.
Available in the following versions:
- **TPA-P**: with leg seam-opening shape, with trousers flipping device and iron rest.
- **TPA-M**: with sleeve seam opening shape, with sleeve flipping device and iron rest.

VACUUM IRONING BOARDS
SPEEDY A, SE-DS, SE-DS/C, TGAS
STIRMATIC

The vacuum function blocks the piece of clothing on the board, thus increasing its ease of handling and improving the final result and making ironing faster and more efficient. The significant power of our machines allows the operator to work with the highest precision, thanks also to the uniform vacuum, which absorbs the dampness of the steam issued from the iron.



SPEEDY A
Folding vacuum table with heated "Maxi" board
- Height adjustable, folding ironing table.
- Utility vacuum and electrically heated Maxi board.
- Built-in suction unit controlled by pedal.



SE-DS
Ironing table with heated board and suction, without boiler.
- Version without boiler.
- Utility vacuum table with electrically heated board.
- Built-in suction unit controlled by foot pedal.
- Adjustable board temperature by thermostat.
- Pedals on both sides of the table.



SE-DS/C
Ironing table with heated board, suction, boiler and iron.
- Version with built-in electric steam boiler, water pump, water feeding tank and electric steam iron.
- Utility ironing table with electrically heated board and suction unit.
- Built-in suction unit controlled by foot pedal.
- Adjustable board temperature by thermostat.
- Pedals on both sides of the table.



TGAS
Electrically heated utility table with boiler and suction unit.
- Finishing table with suction and electrically heated board, controlled by a thermostat.
- Built-in electric steam boiler.
- Automatic water feeding.

1. TGAS: with standard board (1200x400x250).
2. TGAS MAXI : with maxi board (1300x500x250).

VACUUM IRONING BOARDS TAR-C, TAR-V, TRA, TRA/G, TAS STIRMATIC

The vacuum function blocks the piece of clothing on the board, thus increasing its ease of handling and improving the final result and making ironing faster and more efficient. The significant power of our machines allows the operator to work with the highest precision, thanks also to the uniform vacuum, which absorbs the dampness of the steam issued from the iron.



TAR-C, TAR-V

Utility vacuum ironing table, electrically heated, with or without boiler and with built-in vacuum unit.

- Utility vacuum ironing table.
- Electrically heated board.
- Adjustable board temperature by means of a thermostat.
- Built-in vacuum unit.
- Height adjustable board from 750 to 950 mm.
- Ready to connect the spotting shape on swinging arm.



TRA, TRA/G

Rectangular and electrically heated ironing table, with or without boiler.

- Utility vacuum table with electrically heated board.
- Adjustable temperature of the board by means of a thermostat.
- Built-in single phase vacuum unit
- Available either with STANDARD or with MAXI board.
- Steam iron assembly included in the version with boiler.



TAS

Ironing table with heated board and suction unit, without boiler.

- Utility ironing table with electrically heated board and suction
- Adjustable temperature of the board by means of a thermostat
- Built-in single phase suction unit
- Available either with STANDARD or with MAXI board
- Steam iron assembly available on request (AF).

STEAM IRONING BOARDS
TAR-C, TAR-V,TVB/S,TVB/SV,SPM,SPM/C
STIRMATIC

The Steam dampens the piece of clothing fabric in order to improve the final quality of ironing. The ironing board turns into a pressurized vapor cell, which releases its steam through a perforated plate, thus guaranteeing the highest uniformity and releasing speed.



TAR-C, TAR-V

Vacuum and up-steaming table with or without boiler.
Up-steaming and vacuum finishing table with utility board. Available either with built-in electric steam boiler and vacuum unit, or to be connected to an external steam and vacuum supply.

It can be supplied in the following versions:

- TVS STD: with built-in boiler of 16 litres-capacity and standard ironing board (1200x400x250 mm).
- TVS MAXI: with built-in steam boiler of 16 litres-capacity, with maxi board (1300x500x250 mm).
- TVFS STD: without boiler, with standard ironing board (1200x400x250 mm).
- TVFS V MAXI: without boiler, with maxi board (1300x500x250 mm).



TVB/S, TVB/SV

Vacuum, up-steaming and blowing table with or without boiler.
Following versions are available:

- **TVB/S Std:** with Standard-utility board 1200x400x250 mm, with built-in boiler of 16 litres-capacity and iron
- **TVB/S Maxi:** with Maxi-utility board 1300x500x250 mm, with built-in boiler of 16 litres-capacity and iron;
- **TVB/SV Std:** with Standard-utility board 1200x400x250 mm, to be connected to external steam supply. Iron included.
- **TVB/SV Maxi:** with Maxi-utility board 1300x500x250 mm, to be connected to external steam supply. Iron included.



SPM, SPM/C

Rectangular up-steaming ironing table with suction, with or without boiler.

- Rectangular up-steaming ironing table with steam iron and built-in suction unit. Available either with built-in electric boiler (SPM/C) or to be connected to a central steam supply (SPM).

BLOWING IRONING BOARDS TVS TVFS, STIRMATIC

Professional blowing ironing boards, specially designed for the activities of the filed which must preserve the most delicate fabrics: the most demanding dry cleaners and laundries, high fashion tailor shops and knitwear shops, the most luxurious Hotels and Restaurants.

The **warm air jet** issued by the perforated plate helps in ironing any type of delicate fabric, drying it uniformly and reducing the pressing action of the iron.
Made in **Italy** components and advanced technology, to have a high efficiency and yield in any condition, as well as an aftersale assistance service which helps in the maintenance of the chosen solution, with guaranteed spare parts.



TARS-C, TARS-V

Electrically heated vacuum and blowing ironing table with or without boiler and with extractor.

- Universal ironing board with vacuum and blowing function.
- Electrically heated ironing board.
- Ironing board temperature adjustable via thermostat.
- Built-in single-phase vacuum and blowing device.
- Ironing board height adjustable from 750 to 950 mm.
- Provision for mounting the stain remover on the sleeve ironing arm joint.



TVB-R, TVB-RV

- Utility vacuum and blowing ironing table.
- Electrically heated board.
- Adjustable board temperature by means of a thermostat.
- Built-in vacuum and blowing unit.
- Height adjustable board from 750 to 950 mm.
- Pedals on both sides of the table.
- Air exhaust chimney.
- Ready to connect two vacuum and blowing swinging arms.

STEAM, VACUUM & BLOWING IRONING TABLES
PVT 30-31-38, SERIES 1980, 3300, 2000, 3000, 388
ROTONDI



PVT-30-31-38
- Vacuum with high-depression motor at 0.37 KW - 0.5HP.
- Electrically heated form. Special forms upon request.
- Garment holders.
- 3-layer padding. Silicon iron rest.

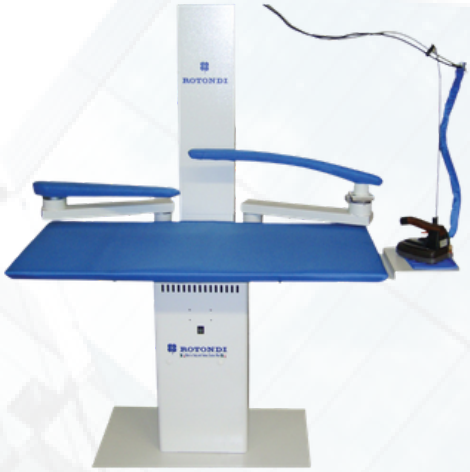

SERIES 1980
- Heated to keep work surface dry. Built-in boiler 5 lt, 4 kW for independent unit, Rectangular shape for multipurpose operation.
- Complete of electric steam iron Integrated vacuum fan holds the garment in place Swinging arm with heated sleeve arm and dry the fabric after pressing. Steam gun
- Standard buck shape size 130 x 65 cm



SERIES 3300
Universal ironing board with vacuum, blowing and steaming.
- Steam heated ironing surface.
- Garment holders.
- 4-layer padding with pure silicon foams, Iron rest.
- High-depression vacuum motor at 0,37KW - 0,5 HP



SERIES 2000
Modular ironing table with vacuum and air-blowing.
- Mobile pedal unit with adjustable depth, with possibility of right or left ironing.
- Infinite height adjustment. Garment holders with adjustable height.
- Electrically heated (2000E) or cold (2000C) bucks, easily interchangeable (see page 20). Special bucks upon request.
- 4-layer padding with pure silicon foam.



SERIES 3000
Universal ironing board with steaming and vacuum.
- Steam heated ironing surface.
- Garment holders.
- 4-layer padding with pure silicon foam. Silicon iron rest.
- High-depression vacuum motor at 0,37KW - 0,5 HP.
- Anti-heat buffer.



SERIES 388
- Heated to keep work surface dry .
- Built-in boiler 5 lt, 4 kW for independent
- Utility shape for multipurpose operation . unit , complete of electric steam iron.
- Integrated vacuum fan holds the garment in place Swinging arm with heated sleeve arm and dry the fabric after pressing .

PRESSING MACHINES

Powerful pressing machines designed for precision and efficiency, delivering crisp, professional finishes every time. Durable, reliable, and built for high-volume commercial use.



IRON PRESSES MACHINES
COLOX PRESS, STANDARD PRESS, BRAVA PRESS, LAV, TRIUSERS PRESSES, COLLAR AND CUFF PRESSES
ROTONDI



COLOX PRESSES SPECIAL

- Air-operated presses with a fast head movement and increased squeezing pressure by 73%. High professional press for high productivity.

Available in the following shapes:

- **CP/U** Special utility shape
- **CP/UP** Special utility legger shape
- **CP/US** Special utility cut-out shape
- **CP/P** Special legger shape



STANDARD PRESSES

- Universal ironing press with manual functioning and very easy to use and maintain. The movement of the upper head is operated by a pressure pedal, Padded head with live steam or polished, lower buck with live steam and vacuum

Version with padded head is available in the following shapes:

- **SP/U** utility shape
- **SP/UP** utility legger shape
- **SP/P** legger shape



BRAVA PRESSES

- Air operated universal press, with good performances and moderate price. Padded and live steam or nickel-plated polished head, lower buck with live steam and vacuum, blowing upon request

The model with padded head is available in the following buck forms:

- **BP/U** with utility shape
- **BP/B** with topper shape



LAV PRESSES

- Air-operated finishing presses for wet garments. Nickel-plated POLISHED steam heated head, steam-heated lower buck WITHOUT VACUUM, adjustable squeezing pressure. 50° head opening.

Available in different shapes:

- **LAV/U** Utility shape
- **LAV/UP** Utility legger shape
- **LAV/P** Legger shape
- **LAV-R1**/E rectangular shape and electrically heated lower buck, vacuum upon request
- **LAV/F** Mushroom shape



TROUSERS PRESSES

- **PANTAMASTER** is a press with horizontal bucks, specifically studied for the rapid flawless finishing of trousers.
- A functional pneumatic clamps'system, controlled by a pedal, locks the waistband and sets the pleats, facilitating the correct positioning of trousers' leg.
- The particular shape of the two bucks and the intermediate frame allow the finishing of the two legs, fixing the pleats and giving in a few seconds, a pair of trousers ready to be packaged.



COLLAR AND CUFF PRESSES

- **All presses** are equipped with powerful vacuum units to facilitate placing collar and cuffs and quickly remove any residual moisture. Additionally, Pony Collar and Cuff series offers:
- **NO-SHINE Technology**: the upper bucks are Teflon-coated to achieve excellent ironing without leaving shine on dark fabrics.
- **The best ergonomic solutions** to enable the operator to work with the correct posture, without getting tired.

MANUAL IRON PRESSES
M/PAU, M/CM 316, M/PAB, M/PAGS, M/PAU L
STIRMATIC



M/PAU
Manually operated utility press, with or without built-in boiler and suction unit
- The lower buck features both up-steaming and suction.
- The upper board is polished, steam heated and made of stainless steel.
- The opening of the upper board is controlled by a pedal, which simultaneously sets off the suctioning in order to prevent the shifting of the garment on the board during this operation.



M/CM 316
Manually operated collar & cuffs press, with upper polished buck, with or without built-in boiler and suction unit.
- The lower buck features both up-steaming and suction.
- The upper board is polished, steam heated and made of stainless steel.
- The opening of the upper board is controlled by a pedal, which simultaneously sets off the suctioning in order to prevent the shifting of the garment on the board during this operation.



M/PAB
Manually operated mushroom press, with or without built-in boiler and suction unit.
- The lower buck features both up-steaming and suction.
- The upper board is polished, steam heated and made of stainless steel.
- The opening of the upper board is controlled by a pedal, which simultaneously sets off the suctioning in order to prevent the shifting of the garment on the board during this operation.



M/PAGS
Manually operated press with combined utility legger bucks, with or without built-in boiler and suction unit.
- The lower buck features both up-steaming and suction.
- The upper board is polished, steam heated and made of stainless steel.
- The opening of the upper board is controlled by a pedal, which simultaneously sets off the suctioning in order to prevent the shifting of the garment on the board during this operation.



M/PAU L
Manually operated utility laundry press, with upper polished buck for laundries, with or without built-in boiler and suction unit.
- The upper board is polished, steam heated and made of stainless steel.
- The opening of the upper board is controlled by a pedal, which simultaneously sets off the suctioning in order to prevent the shifting of the garment on the board during this operation.
- The M/PAU L is available either built-in boiler and suction unit, or to be connected to a central steam and vacuum supply.

PNEUMATIC IRONING PRESSES FOR DRY CLEANERS
PAB, PAG-AV, PAB-AV, PAU, PAGS
STIRMATIC



PAB
Air-operated press with mushrooms bucks, with or without boiler, vacuum unit and compressor.
- Stirmatic automatic presses are easily operated thanks to their pneumatic systems
- They feature new higher power pressing, fully adjustable, and a variety of bucks for specialist applications.
- The wide opening bucks, facilitate both the pressing operation and the use of the steam iron.



PAG-AV
Air-operated press with legger bucks, with or without boiler, vacuum unit and compressor.
- The presses are available either completely self contained with built-in electric and automatic steam boiler, vacuum and compressor unit as required, or for central supplies operation.
- AB version - Lowering of the press head controlled by two push buttons.
- AP version - Lowering of the press head controlled by one pedal, complete with safety frame.



PAB-AV
Air-operated press with topper bucks, with or without boiler, vacuum unit and compressor.
- Stirmatic automatic presses are easily operated thanks to their pneumatic systems
- They feature new higher power pressing, fully adjustable, and a variety of bucks for specialist applications.
- The wide opening bucks, facilitate both the pressing operation and the use of the steam iron.



PAU
Utility air-operated presses with or without boiler, vacuum unit and compressor.
- The presses are available either completely self contained with built-in electric and automatic steam boiler, vacuum and compressor unit as required, or for central supplies operation.
- AB version - Lowering of the press head controlled by two push buttons.
- AP version - Lowering of the press head controlled by one pedal, complete with safety frame.



PAGS
Air-operated utility-legger press with or without boiler, vacuum unit and compressor
- Stirmatic automatic presses are easily operated thanks to their pneumatic systems.
- They feature new higher power pressing, fully adjustable, and a variety of bucks for specialist applications.
- The wide opening bucks, facilitate both the pressing operation and the use of the steam iron.

PNEUMATIC IRONING PRESSES FOR LAUNDRIES
PAU/L, PAM-B, PACC, PAU-L MAXI, CM 316, PA RETT
STIRMATIC



PAU/L
Utility air-operated press with upper polished buck for laundries, with or without boiler, vacuum unit and compressor.

- Stirmatic automatic presses are easily operated thanks to their pneumatic systems.
- They feature new higher power pressing, fully adjustable, and a variety of bucks for specialist applications.



PAM-B
Utility air-operated press with upper polished buck for laundries, with or without boiler, vacuum unit and compressor.

- The wide opening bucks, facilitate both the pressing operation and the use of the steam iron.
- The presses are available either completely self contained with built-in electric and automatic steam boiler, vacuum and compressor unit as required, or for central supplies operation.



PACC
Utility air-operated press with upper polished buck for laundries, with or without boiler, vacuum unit and compressor.

- Stirmatic automatic presses are easily operated thanks to their pneumatic systems.
- They feature new higher power pressing, fully adjustable, and a variety of bucks for specialist applications.



PAU-L MAXI
Utility air-operated press with upper polished buck for laundries, with or without boiler, vacuum unit and compressor.

- Stirmatic automatic presses are easily operated thanks to their pneumatic systems.
- They feature new higher power pressing, fully adjustable, and a variety of bucks for specialist applications.



CM 316
Air-operated press with collar & cuffs boards, with upper polished buck, with or without boiler, vacuum unit and compressor.

- They feature new higher power pressing, fully adjustable, and a variety of bucks for specialist applications.
- The wide opening bucks, facilitate both the pressing operation and the use of the steam iron.

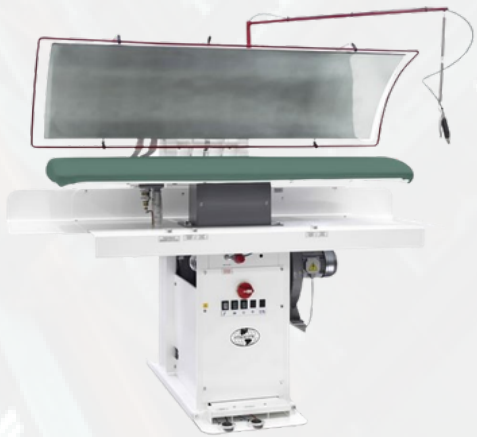

PA RETT
Rectangular air-operated press with upper polished buck for laundries, with or without boiler, vacuum unit and compressor.

- The wide opening bucks, facilitate both the pressing operation and the use of the steam iron.
- - The presses are available either completely self contained with built-in electric and automatic steam boiler, vacuum and compressor unit as required, or for central supplies operation.

MANUAL, AIR OPERATED, ROTARY LAUNDRY PRESS
BX, MOD, BL-DRY CLEANING PRESSES SERIES
ROTONDI







BX

Manual – foot operated pressing machines for ironing jackets, over-coats, pants etc.

- Head with steaming. Buck with vacuum and steaming.
- Adjustable pressing pressure. Lower padding of 5 layers with pure silicon foam.

Various forms are available:

- CO-90 - Universal - length 117 cm
- CO-49 - Universal long - length 124 cm
- CO-5 - Universal short - length 107cm - 42"

MOD BL CRP/L/CR

- Steam available from buck shapes Steam boiler 24 lt (12, 15 or 18 kW)
- High temperature polished head dries the fabric Vacuum motor 0,50 Hp and gives it a flat finish Integrated air compressor.
- Vacuum on buck shape to dry fabric when pressing Electric steam iron group.
- Air operated press head for easy comfortable use All steam iron group.
- Two push button operated press head for operator Steam / air gun for spot removal safety.

MOD 18 RD CRP

- Stainless steel head steam heated - Water spray gun
- Adjustable pressure
- Electric steam iron group
- Rotating operation by pedal
- Electrically heated head
- Photo cell protection to prevent injuries
- Special buck shape available on request
- Two bucks and one head





MOD BL/CLP

The true alternative for quality ironing of shirt collars and cuffs.

- Triple form, one collar and two cuffs
- Head in stainless steel
- Buck heated with steam (BL CLP/V) or electrically (BL CLP /E -3,1 KW)
- Buck cold or steam-heated, with connection for vacuum.
- Pressing pressure adjustable
- Two-button closing with device for simultaneous or pedal operation.

BL-DRY CLEANING PRESSES

- Adjustable pressing pressure.
- Accident-prevention protection on head.
- Lower padding of 5 layers with pure silicon foam.
- Different forms are available:
- CO-90 - Universal - length 117 cm
- CO-49 - Universal long - length 124 cm
- CO-5 - Universal short - length 107cm - 42"
- 1104 - Combined, universal and ironing of pants legs
- E-30 - Single legger
- B-99 - Trouser top pressing Special forms upon request

INDUSTRIAL IRONERS MACHINES

Flat ironers built for speed and precision, ensuring perfectly smooth and crisp fabrics every time. Durable, efficient, and ideal for high-volume professional laundries.



WALL IRONERS
R2D18(Ø 180 MM)-R2D25(Ø 250 MM)
DANUBE

DANUBE has designed and developed a range of ironers that can be installed in very small spaces and require virtually no installation or maintenance.

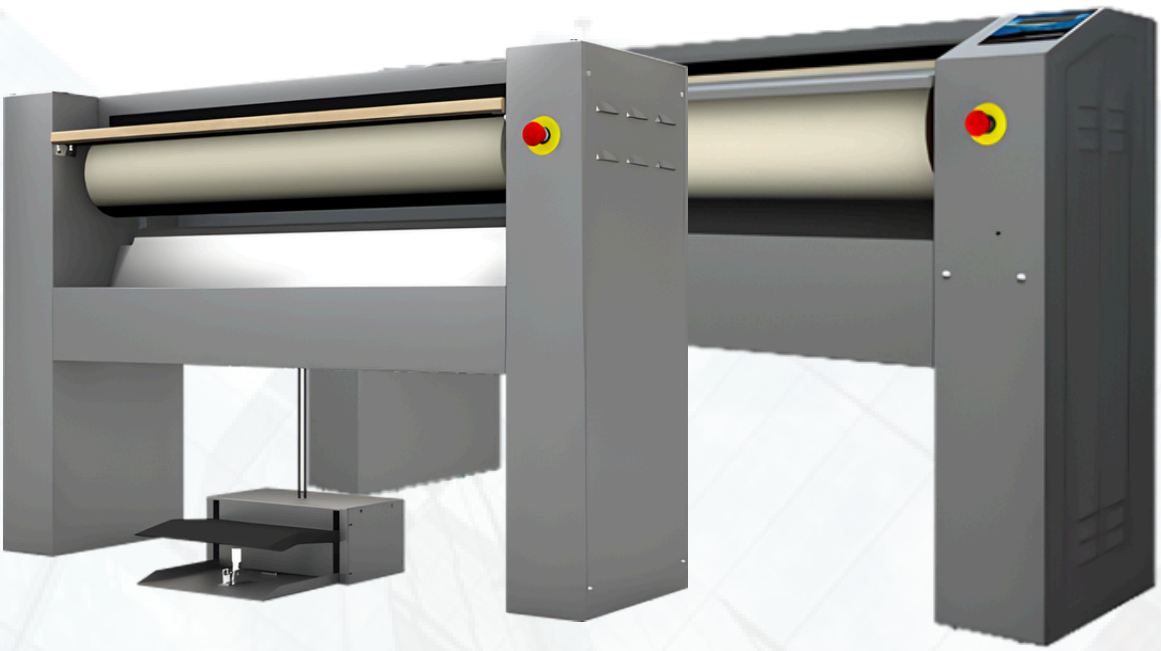

MODELS
1. R2D18-100
2. R2D18-100N
3. R2D18- 120
4. R2D18- 120N
5. R2D25-100
6. R2D25- 100N
7. R2D25- 120
8. R2D25- 120N
9. R2D25- 140
10. R2D25- 140N
11. R2D25- 200
12. R2D25- 200N

EFFICIENCY
- **Acoustic comfort** : <55 dB
- **Minimum space requirement**: Space saving, suitable for small spaces.
- Ideal for processing small quantity of flat linen in facilities like restaurants, guest rooms, hostels, etc.

ELECTRONIC CONTROL
- **Simple and user friendly** : Start/stop button, selection of 4 temperatures.
- Preset ironing speeds, not adjustable.

ROBUSTNESS
- **Nomex quality coating**: resistant to high temperatures.
- Panels in grey skin plate and stainless steel.
- Wooden feeding board.

FEATURES
- Large roll contact area with the linen.
- Roll lifting control by pedal Two available models.
- **Standard model**: Roll with cotton polyester coating.
- **Nomex Model**: Roll with Nomex coating.

MAINTENANCE
- **Easy installation** : Requires only an electrical connection.
- Easy access on both sides for maintenance

OTHERS
- Front feeding and return
- Roll ø 180 mm
- **Working widths**: 1.000 and 1.200 mm
- Electric heating
- CE certification

FEATURES

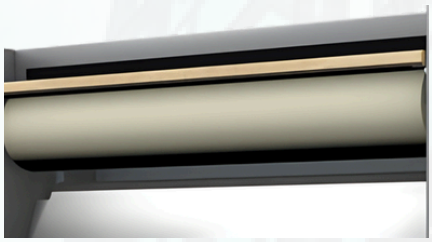

- After the tunnel washers' inner drums are welded together and precisely processed by lathes, the entire drum beating is controlled within 5-10 silk.

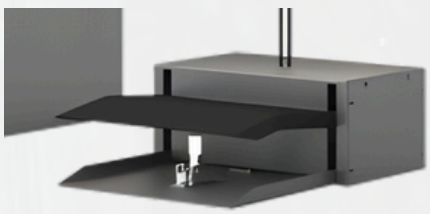

- The bottom frame of the CLM tunnel washers is designed with a 200mm thickness H-type heavy structure steel. Not easy to deform during transportation, and the strength is good.



- Bottom Transfer. It is not easy to block and damage the linen.

R2D18(Ø 180 MM)-R2D25(Ø 250 MM)
DATA SHEET

GENERAL DETAILS	Unit	R2D18-100 ø 180mm	R2D18-100N ø 180mm	R2D18-120 ø 180mm	R2D18-120N ø 180mm	R2D25-100 ø 250mm	R2D25-100N ø 250mm	R2D25-120 ø 250mm	R2D25-120N ø 250mm	R2D25-140 ø 250mm	R2D25-140N ø 250mm	R2D25-200 ø 250mm	R2D25-200N ø 250mm
Theoretical production 20-25% humidity	Kg/h	15	15	20	20	25	25	27,5	27,5	30	30	35	35
	Lb/h	33,07	33,07	44,09	44,09	55,12	55,12	60,63	60,63	66,14	66,14	77,16	77,16
Roll Ø	mm	180	180	180	180	250	250	250	250	250	250	250	250
	Inch	7,09	7,09	7,09	7,09	9,84	9,84	9,84	9,84	9,84	9,84	9,84	9,84
Working width	mm	1	1	1,2	1,2	1	1	1,2	1,2	1,4	1,4	2	2
	Inch	39,37	39,37	39,37	39,37	39,37	39,37	47,24	47,24	55,12	55,12	78,74	78,74
Working speed	m/min	2,02	2,02	2,02	2,02	4,2	4,2	4,2	4,2	4,2	4,2	4,2	4,2
	ft/min	6,62	6,62	6,62	6,62	13,77	13,77	13,77	13,77	13,77	13,77	13,77	13,77
Nomex quality coating	-	NO	YES	NO	YES	NO	YES	NO	YES	NO	YES	NO	YES
Electronic control	-	YES	YES	YES	YES	YES	YES	YES	YES	YES	YES	YES	YES
Chest motion	-	Manual	Manual	Manual	Manual	AUTO	AUTO	AUTO	AUTO	AUTO	AUTO	AUTO	AUTO
POWER													
Heating power	Kw	3,30	3,30	4	4	4,95	4,95	6	6	7	7	12	12
Roll motor power	Kw	0,029	0,03	0,029	0,03	0,18	0,18	0,18	0,18	0,18	0,18	0,18	0,18
Fan motor power	Kw	-	-	-	-	-	-	-	-	-	-	-	-
Total electric power	Kw	3329	3,33	4029	4,03	5,13	5,13	6,18	6,18	7,18	7,18	12,18	12,18
CONNECTIONS													
Tension 230V I + N + T	n° x mm² /A	3 x 4 / 16A	3 x 4 / 16A	3 x 4 / 20A	3 x 4 / 20A	3 x 6 / 25A	3 x 6 / 25A	3 x 6 / 32A	3 x 6 / 32A	3 x 10 / 40A	3 x 10 / 40A	N/A	N/A
	n° x AWG/A	3 x 11 / 16A	3 x 11 / 16A	3 x 11 / 20A	3 x 11 / 20A	3 x 9 / 25A	3 x 9 / 25A	3 x 9 / 32A	3 x 9 / 32A	3 x 7 / 40A	3 x 7 / 40A	N/A	N/A
Tension 230V III + T	n° x mm² /A	N/A	N/A	N/A	N/A	4 x 2,5 / 16A	4 x 2,5 / 16A	4 x 4 / 20A	4 x 4 / 20A	4 x 4 / 20A	4 x 4 / 20A	4 x 6 / 32A	4 x 6 / 32A
	n° x AWG/A	N/A	N/A	N/A	N/A	4 x 13 / 16A	4 x 13 / 16A	4 x 11 / 20A	4 x 11 / 20A	4 x 11 / 20A	4 x 11 / 20A	4 x 9 / 32A	4 x 9 / 32A
Tension 400V III + N + T	n° x mm² /A	N/A	N/A	N/A	N/A	5 x 2,5 / 10A	5 x 2,5 / 10A	5 x 2,5 / 10A	5 x 2,5 / 10A	5 x 2,5 / 16A	5 x 2,5 / 16A	5 x 4 / 20A	5 x 4 / 20A
	n° x AWG/A	N/A	N/A	N/A	N/A	5 x 13 / 10A	5 x 13 / 10A	5 x 13 / 10A	5 x 13/ 10A	5 x 13 / 16A	5 x 13 / 16A	5 x 11 / 20A	5 x 11 / 20A
DIMESNSIONS / DIMESNSIONS WITH PACKING													
Net width / Gross width	mm	1.370 / 1.490	1.370 / 1.490	1.570 / 1.690	1.570 / 1.690	1.462 / 1.490	1.462 / 1.490	1.662 / 1.690	1.662 / 1.690	1.862 / 1.890	1.862 / 1.890	2.462 / 2.490	2.462 / 2.490
	Inch	54 / 59	54 / 59	62 / 67	62 / 67	58 / 59	58 / 59	65 / 67	65 / 67	73 / 74	73 / 74	97 / 98	97 / 98
Net depth / Gross depth	mm	438 / 540	438 / 540	438 / 540	438 / 540	484 / 540	484 / 540	484 / 540	484 / 540	484 / 540	484 / 540	484 / 540	484 / 540
	Inch	17 / 21	17 / 21	17 / 21	17 / 21	19 / 21	19 / 21	19 / 21	19 / 21	19 / 21	19 / 21	19 / 21	19 / 21
Net height / Gross height	mm	952 / 1.130	952 / 1.130	952 / 1.130	952 / 1.130	985 / 1.130	985 / 1.130	985 / 1.130	985 / 1.130	985 / 1.130	985 / 1.130	985 / 1.130	985 / 1.130
	Inch	37 / 44	37 / 44	37 / 44	37 / 44	39 / 44	39 / 44	39 / 44	39 / 44	39 / 44	39 / 44	39 / 44	39 / 44
Net weight / Gross weight	Kg	80 / 100	80 / 100	90 / 110	90 / 110	114 / 124	114 / 124	124 / 134	124 / 134	134 / 154	134 / 154	164 / 184	164 / 184
	Lb	176 / 220	176 / 220	198 / 243	198 / 243	251 / 273	251 / 273	273 / 295	273 / 295	295 / 340	295 / 340	362 / 406	362 / 406
Volume	m³	0,57 / 0,91	0,52 / 0,91	0,65 / 1,03	0,65 / 1,03	0,69 / 0,91	0,69 / 0,91	0,79 / 1,03	0,79 / 1,03	0,89 / 1,15	0,89 / 1,15	1,17 / 1,51	1,17 / 1,51
	ft3	20,13 / 32,14	20,13 / 32,14	22,95 / 36,37	22,95 / 36,37	24,37 / 32,14	24,37 / 32,14	27,90 / 36,37	27,90 / 36,37	31,43 / 40,61	31,43 / 40,61	41,32 / 53,33	41,32 / 53,33
OTHERS													
Number of fume outlets	NO	-	-	-	-	-	-	-	-	-	-	-	-
Ø fume outlets	mm	-	-	-	-	-	-	-	-	-	-	-	-
Air flow (suction)	m3/h	-	-	-	-	-	-	-	-	-	-	-	-
Noise level	dB	55	55	55	55	55	55	55	55	55	55	55	55

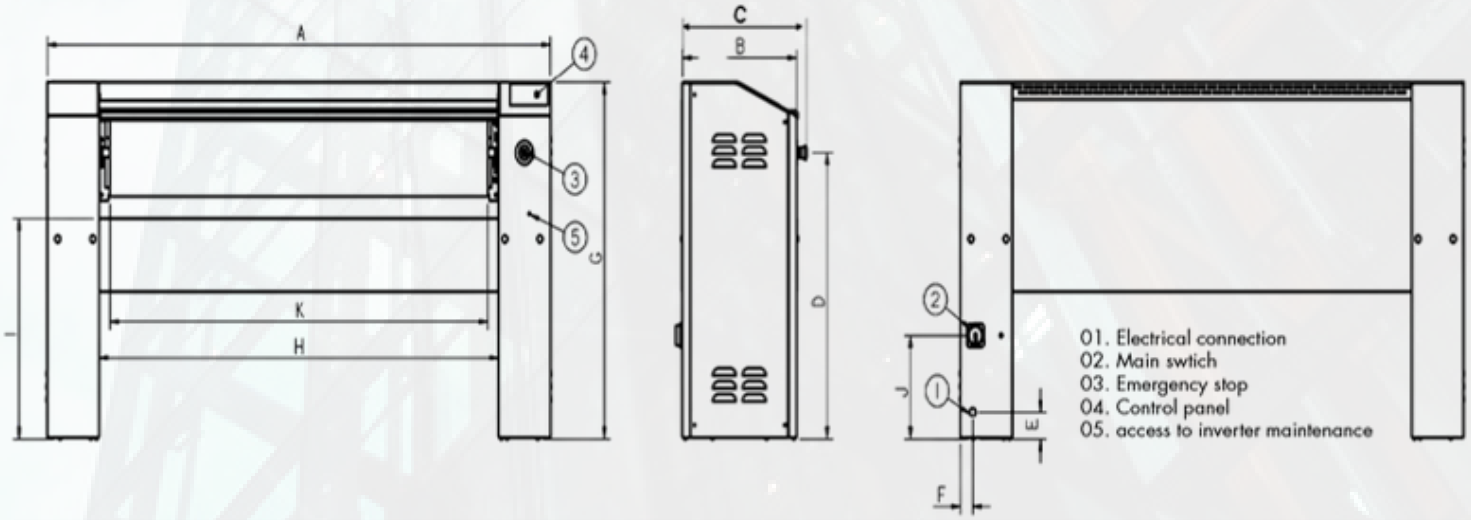

	A	B	C	D	E	F	G	H	I	J	K
R2D25/100	1.462	423	484	791	75	45	985	1.079	610	287	998
R2D25/120	1.662	423	484	791	75	45	985	1.279	610	287	1.198
R2D25/140	1.862	423	484	791	75	45	985	1.479	610	287	1.398
R2D25/200	2.462	423	484	791	75	45	985	2.079	610	287	1.998

WALL IRONERS
R2D25 GOLD Ø 250 MM
DANUBE

Danube presents its new **GOLD** range of wall ironers with working width 1m 40 and 2m to be more productive and efficient. Equipped, in addition, with suction and a speed inverter.

MODELS
1. R2D25- 140 GOLD
2. R2D25- 200 GOLD



EFFICIENCY
- **Acoustic comfort** : max. 60 dB
- Minimum space requirement: space saving, suitable for small spaces.
- Ideal for processing small quantity of flat linen in facilities like restaurants, guest rooms, etc.

ELECTRONIC CONTROL
- **BM control:** simple and user friendly with an AUTO mode, automatic management of ironing speed according to the selected temperature.
- Digital speed and temperature display

ROBUSTNESS
- **Nomex coating as standard:** resistant to high temperatures.
- Panels in grey skin plate and stainless steel.
- Wooden feeding board.
- New kinematics, better reliability.
- Industrial components, more durable.

FEATURES
- Large roll contact area with the linen.
- Roll lifting control by pedal Two available models.
- **Standard model:** roll with cotton polyester coating.
- **Nomex Model:** roll with Nomex coating.

MAINTENANCE
- **Easy installation** : Requires only an electrical connection.
- Easy access on both sides for maintenance.
- Quick and easy dismantling of bearings.

OTHERS
- Front feeding and return
- **Roll ø 250 mm Working widths:** 1.400 and 2.000 mm
- Electric heating
- CE certification

FEATURES



- After the tunnel washers' inner drums are welded together and precisely processed by lathes, the entire drum beating is controlled within 5-10 silk.

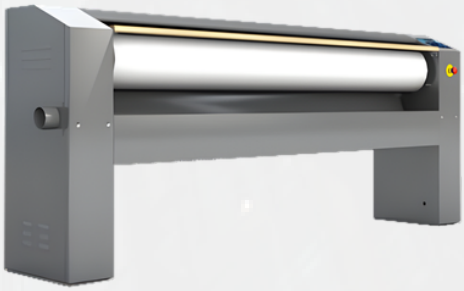

- **BM control:** simple and user friendly with an AUTO mode, automatic management of ironing speed according to the selected temperature.



- Bottom Transfer. It is not easy to block and damage the linen.

R2D25-140/200 GOLD Ø 250 MM
DATA SHEET

GENERAL DETAILS	Unit	R2D25-140 GOLD	R2D25-200 GOLD
Theoretical production 20-25% humidity	Kg/h	40	50
	Lb/h	88,18	110,23
Roll Ø	mm	250	250
	Inch	9,84	9,84
Working width	mm	1.4	2
	Inch	55,12	78,74
Working speed	m/min	1,5-6	1,5-6
	ft/min	4,9 - 19,6	4,9 - 19,6
Nomex quality coating	-	YES	YES
Electronic control	-	YES	YES
Chest motion	-	NO	NO
POWER			
Heating power	Kw	7	12
Roll motor power	Kw	0,18	0,18
Fan motor power	Kw	0,12	0,12
Total electric power	Kw	7,3	12,3
CONNECTIONS			
Tension 230V I + N + T	n° x mm² /A	N/A	N/A
	n° x AWG/A	N/A	N/A
Tension 230V III + T	n° x mm² /A	4 x 6 / 20A	4 x 10 / 40A
	n° x AWG/A	4 x 9 / 20A	4 x 7 / 40A
Tension 400V III + N + T	n° x mm² /A	5 x 4 / 16A	5 x 4 / 20A
	n° x AWG/A	5 x 11 / 16A	5 x 11 / 20A
DIMESNSIONS / DIMESNSIONS WITH PACKING			
Net width / Gross width	mm	1.923 / 1.890*	2.523 / 2.490*
	Inch	73 / 74	97 / 98
Net depth / Gross depth	mm	484 / 540	484 / 540
	Inch	19 / 21	19 / 21
Net height / Gross height	mm	985 / 1.130	985 / 1.130
	Inch	39 / 44	39 / 44
Net weight / Gross weight	Kg	154 / 174	184 / 204
	Lb	340 / 384	406 / 450
Volume	m³	0,92 / 1,15	1,20 / 1,52
	ft3	32,38 / 40,73	42,48 / 53,66
OTHERS			
Number of fume outlets	Nb	1	1
Ø fume outlets	mm	80	80
	inch	3,15	3,15
Air flow (suction)	m3/h	500	500
	cfm	294	294
Noise level	dB	60	60

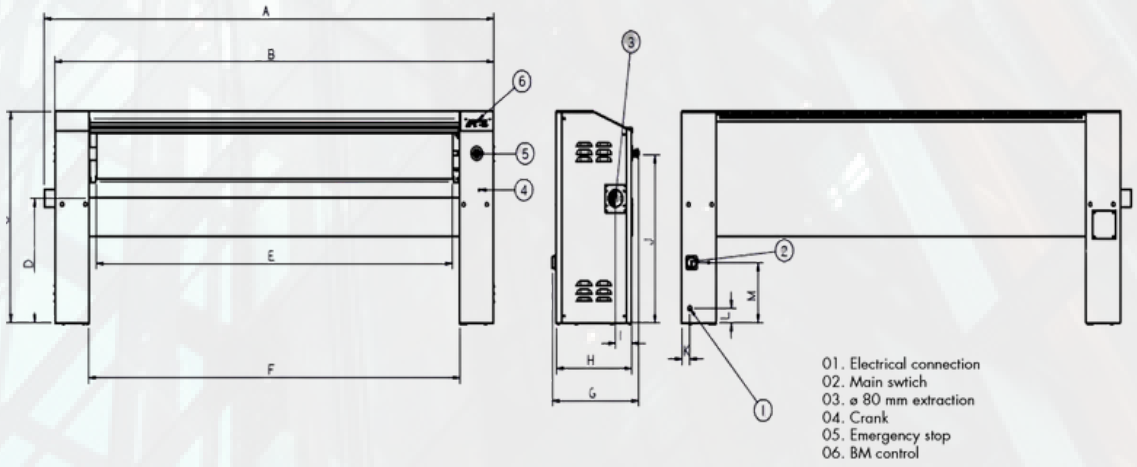

	A	B	C	D	E	F	G	H	I	J	K	L	M
R2D25/140 GOLD	1.923	1.862	985	610	1.400	1.480	484	423	91	791	45	75	287
R2D25/200 GOLD	2.523	2.462	985	610	2.000	2.080	484	423	91	791	45	75	287

FLATWORK IRONERS Ø 325MM
D-BM/D-GOLD FLATWORK IRONERS
DANUBE

These models of **ø 325 mm** flatwork ironers are equipped with the **BM Electronic control** which allows them to be more efficient and more flexible thanks to its three operating modes, including **AUTO mode**, which automatically manages the ironing speed.

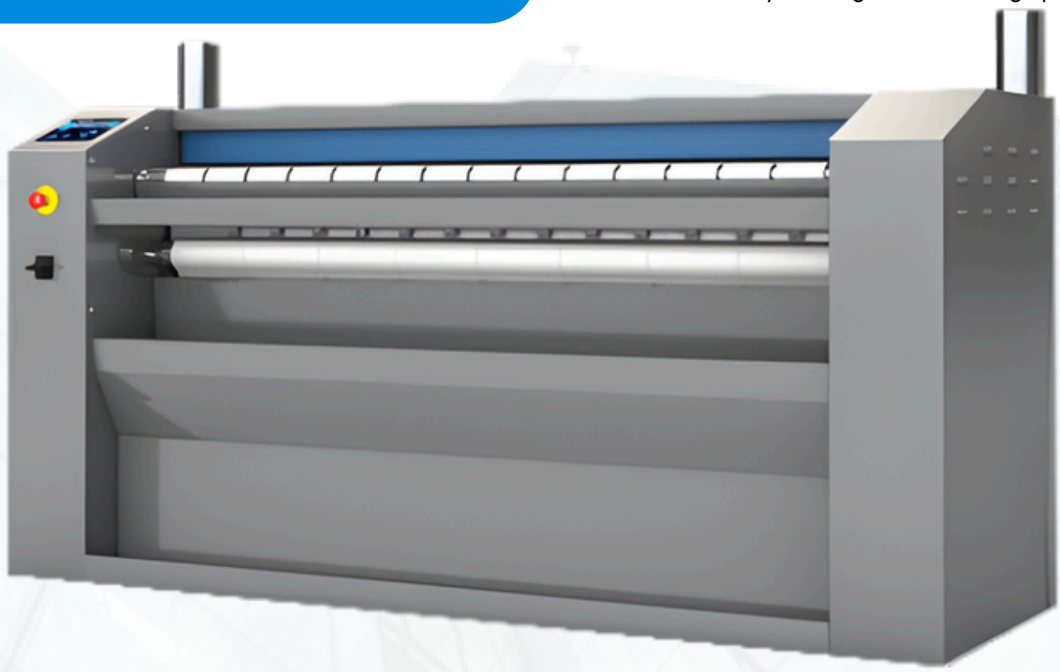

MODELS
1. D-14 BM
2. D-16 BM
3. D-20 BM
4. D-20 GOLD
5. D-26 GOLD
6. D-33 GOLD

EFFICIENCY
- Good heat conduction thanks to the roll material and thickness: greater control of energy expenditure.
- Automatic shutdown at 80°C (adjustable parameter).
- Fumes circulation circuit from the bottom reducing energy consumption.

ROBUSTNESS
- Roll driving by speed inverter
- **Nomex quality feeding and ironing belts:** High temperatures resistant
- Panels in skin plate and stainless steel
- Coiled felt for greater lifespan, Nickel plate roll as option: anticorrosive, more durable.

MAINTENANCE
- Easy access to all components on both sides of the machine.
- **Basic connections** : Electrical connection and air extraction

ELECTRONIC CONTROL
- BM control, simple and user friendly, 2 selectable operating modes:
- **AUTO mode** : automatic management of ironing speed according to the selected temperature.
- **MANUAL mode:** selection of temperature and speed.

FEATURES
- **Acoustic comfort** : <65 dB
- Appropriate operating height: 990 mm feeding belts.
- **Minimal encumbrance:** space saving, suitable for most spaces.
- **Electronic control with Auto mode:** easy to use, optimized ironing speed.

OTHERS
- Dries and irons flat linen from a high spin washer extractor in a single operation
- Polished steel roll ø 325 mm
- Working widths: 1.400, 1.600 and 2.000 mm Electric or atmospheric gas heating
- CE standard

FEATURES



- After the tunnel washers' inner drums are welded together and precisely processed by lathes, the entire drum beating is controlled within 5-10 silk.



- The bottom frame of the CLM tunnel washers is designed with a 200mm thickness H-type heavy structure steel. Not easy to deform during transportation, and the strength is good.

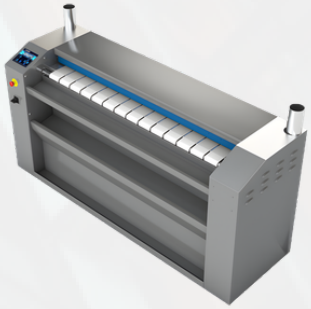

- Bottom Transfer. It is not easy to block and damage the linen.

D-14,16,20 BM & D-20,26,33 GOLD
DATA SHEET

GENERAL DETAILS	UNIT	D-14 BM		D-16 BM		D-20 BM		D-20 GOLD		D-26 GOLD		D-33 GOLD	
Theoretical production Electric heating*	Kg/h	18		30		40		50		60		85	
	Lb/h	40		66		88		110		132		187	
Theoretical production Gas atmo heating*	Kg/h	22		32		42		N/A		N/A		N/A	
	lb/h	49		71		93		N/A		N/A		N/A	
Theoretical production Radiant gas heating*	Kg/h	N/A		N/A		N/A		65		75		100	
	lb/l	N/A		N/A		N/A		143		165		220	
Roll Ø	mm	325		325		325		325		325		325	
	inch	12,80		12,80		12,80		12,80		12,80		12,80	
Working width	mm	1.4		1.6		2		2		2.6		3.3	
	inch	55,1		63,0		78,7		78,7		102,4		129,9	
Height floor-feeding belts	mm	990		990		990		990		990		990	
	inch	39,0		39,0		39,0		39,0		39,0		39,0	
Working speed	m/min	1,5-10		1,5-10		1,5-10		1,5-12		1,5-12		1,5-12	
	ft/min	4.9-32		4.9-32		4.9-32		4.9-39		4.9-39		4.9-39	
Electronic control	-	YES		YES		YES		YES		YES		YES	
No. Program	-	2		2		2		2		2		2	
Length folder	-	NO		NO		NO		N/A		N/A		N/A	
Large surface contact with linen	-	270°		270°		270°		270°		270°		270°	
POWER													
Electric mod.: heating power	Kw	12		16,2		21		31,5		40,5		54	
Electric mod: Total electric power	Kw	12,37		16,57		21,49		32,02		41,02		54,52	
Gas mod.: heating power	Kw	14		22,5		30		40		55		69	
Gas mod.: total electric power	Kw	0,37		0,37		0,49		0,77		0,77		0,77	
Steam mod. : heating power	Kg/h	-		-		-		-		-		-	
Roll motor power	Kw	0,28		0,28		0,28		0,41		0,41		0,41	
Fan motor power	Kw	0,12		0,12		0,12 x 2		0,18 x 2		0,18 x 2		0,18 x 2	
CONNECTIONS		E	G	E	G	E	G	E	G	E	G	E	G
Tension 230V I + N + T	n° x mm² /A	N/A	3 x 2,5 / 6A	N/A	3 x 2,5 / 6A	N/A	3 x 2,5 / 6A	N/A	3 x 2,5 / 6A	N/A	3 x 2,5 / 6A	N/A	3 x 2,5 / 6A
	n° x AWG/A	N/A	3 x 13 / 6A	N/A	3 x 13 / 6A	N/A	3 x 13 / 6A	N/A	3 x 13 / 6A	N/A	3 x 13 / 6A	N/A	3 x 13 / 6A
Tension 230V III + T	n° x mm² /A	4 x 10 / 40A	4 x 2,5 / 6A	4 x 10 / 50A	4 x 2,5 / 6A	4 x 10 / 63A	4 x 2,5 / 6A	4 x 25 / 100A	4 x 2,5 / 6A	4 x 25 / 125A	4 x 2,5 / 6A	4 x 35 / 150A	4 x 2,5 / 6A
	n° x AWG/A	4 x 7 / 40A	3 x 13 / 6A	4 x 7 / 50A	3 x 13 / 6A	4 x 7 / 63A	3 x 13 / 6A	4 x 3 / 100A	3 x 13 / 6A	4 x 3 / 100A	3 x 13 / 6A	4 x 2 / 100A	3 x 13 / 6A
Tension 400V III + N + T	n° x mm² /A	5 x 6 / 20A	5 x 2,5 / 6A	5 x 6 / 25A	5 x 2,5 / 6A	5 x 6 / 40A	5 x 2,5 / 6A	5 x 10 / 50A	5 x 2,5 / 6A	5 x 16 / 63A	5 x 2,5 / 6A	5 x 25 / 100A	5 x 2,5 / 6A
	n° x AWG/A	5 x 9 / 20A	5 x 13 / 6A	5 x 9 / 25A	5 x 13 / 6A	5 x 9 / 40A	5 x 13 / 6A	5 x 7 / 50A	5 x 13 / 6A	5 x 5 / 63A	5 x 13 / 6A	5 x 3 /100A	5 x 13 / 6A
Ø Gas inlet	BSP	1/2"		1/2"		1/2"		1/2"		1/2"		1/2"	
Ø Steam inlet	BSP	-		-		-		-		-		-	
Ø Condensed (Steam models)	BSP	-		-		-		-		-		-	
DIMESNSIONS / DIMESNSIONS WITH PACKING													
Net width / Gross width	mm	1.952/2.34		2.202/2.34		2.552/2.78		2.552/2.78		3.202/3.43		3.852/3.98	
	inch	76,9 / 92,1		86,7 / 92,1		100,5 / 109,4		100,5 / 109,4		126,1 / 135,0		151,7 / 156,7	
Net depth / Gross depth	mm	686 / 770		686 / 770		686 / 770		686 / 770		686 / 770		686 / 770	
	inch	27 / 30,3		27 / 30,3		27 / 30,3		27 / 30,3		27 / 30,3		27 / 30,3	
Net height / Gross height	mm	1.112 / 1.400		1.112 / 1.400		1.112 / 1.400		1.112 / 1.400		1.112 / 1.400		1.112 / 1.400	
	inch	43,8 / 55,1		43,8 / 55,1		43,8 / 55,1		43,8 / 55,1		43,8 / 55,1		43,8 / 55,1	
Net weight / Gross weight	kg	330 / 365		385 / 405		435 / 458		445 / 458		545 / 585		655 / 700	
	lbs	728 / 805		849 / 893		959 / 1.010		981 / 1.010		1.202 / 1.290		1.444 / 1.543	
Net Volume/ Gross Volume	m³	1,49 / 2,52		1,68 / 2,52		1,95 / 3,00		1,95 / 3,00		2,44 / 3,70		2,94 / 4,29	
	f³	52,59 / 89,08		59,32 / 89,08		68,75 / 105,83		68,75 / 105,83		86,26 / 130,58		103,77 / 151,52	
OTHERS													
Number of fume outlets	N°	1		1		2		2		2		2	
Ø fume outlets	mm	98		98		98		98		98		98	
	inch	3,86		3,86		3,86		3,86		3,86		3,86	
Air Flow	m³/h	500		500		1		1		1		1	
	cfm	294		294		589		589		589		589	
Sound level	dB	60		60		63		63		63		63	
Capacité d'évaporation (max)	l/h	8,1		13,5		18		29		34		45	
	USgallon/h	2,1		3,6		4,8		7,7		8,9		11,9	
Additional ELECTRIC POWER for folder option	-	-		-		-		-		-		-	

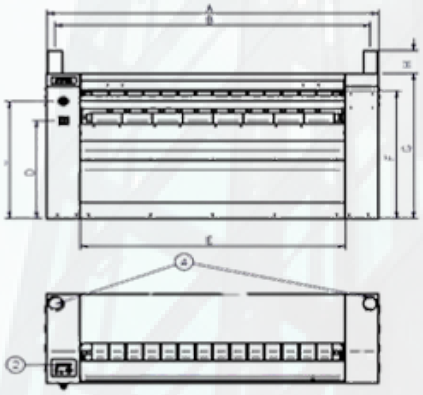

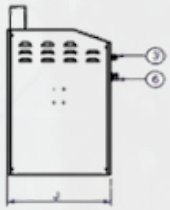

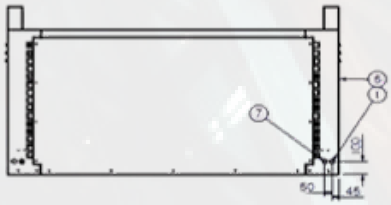

01. Electrical connection
02. BM Control
03. Emergency stop
04. ø 98 mm extraction
05. Crank
06. Main switch

	A	B	C	D	E	F	G	H	I	J
D-14 BM	1.952	1.846	900	750	1.510	980	1.112	140	746	686
D-16 BM	2.202	2.096	900	750	1.760	980	1.112	140	746	686
D-20 BM	2.552	2.446	900	750	2.110	980	1.112	140	746	686

FLATWORK IRONERS Ø 500/650 MM
MII/GII -ET2 FLATWORK IRONERS
DANUBE

Our new generation of **Ø 500 MM** & **Ø 650 MM** flatwork ironers is the result of our expertise and careful attention to customer needs, marking a turning point. Designed to optimize output while improving working comfort, they meet the challenges of the most demanding industrial laundries.

MODELS
1. MII-20 ET2
2. MII-26 ET2
3. MII-33 ET2
4. GII-20 ET2
5. GII-26 ET2
6. GII-33 ET2

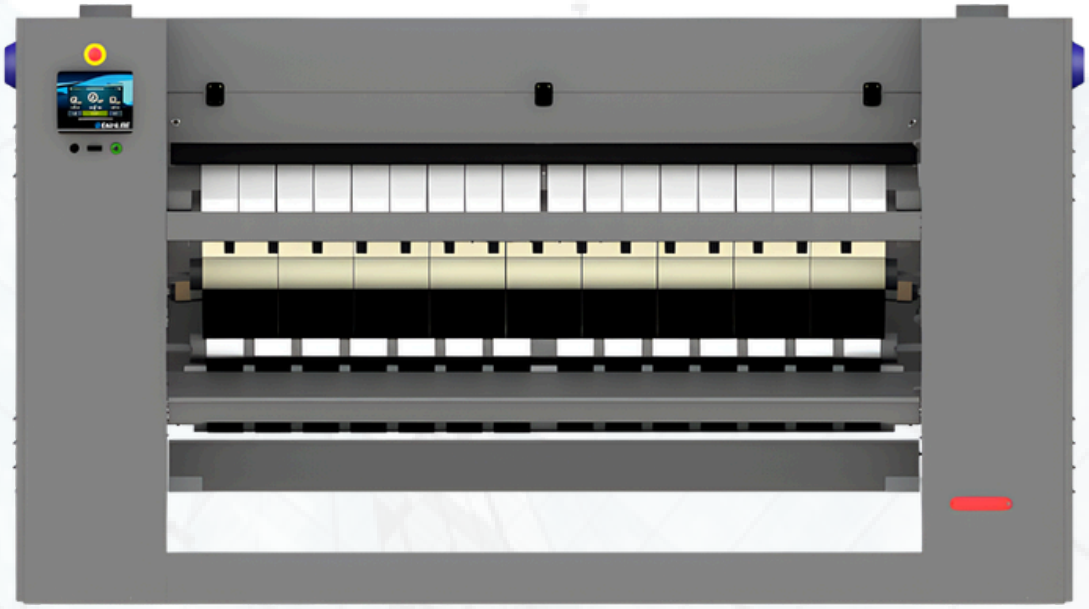

EFFICIENCY
- Automatic shutdown at 80°C (adjustable parameter)
- **Model** with gas radiant burners: +25% productive.
- **CARE IRON:** automatic regulation of ironing speed according to residual moister as option.
- **HPS:** high production system, ironing speed up to 15 m/min as option (not compatible with folder).

ROBUSTNESS
- Roll driving by speed inverter
- Nomex quality ironing belts: high temperatures resistant.
- Panels in skin plate.
- Nickel plate roll as option: anticorrosive, more durable.

MAINTENANCE
- Easy access to all components on both sides of the machine.
- Complete technical menu: statistics, auto test, data recovery for technician and maintenance.
- Remote communication: faster intervention.

EASY TOUCH 2
- **7"** touch screen fully programmable
- **37** available languages, 5 preset programs
- **USB connection:** to import and export data or programmes and update machines without internet connection.

ERGONOMICS
- **Acoustic comfort** : <65 dB
- Appropriate operating height: 1170 mm feeding belts.
- Compact dimensions

OTHERS
- Dries and irons flat linen from a high spin washer extractor in a single operation
- Front feeding and return Built-in cool down system
- Polished steel roll ø 500 mm
- Working widths: 2000, 2600 and 3300 mm
- CE standard

FEATURES



- After the tunnel washers' inner drums are welded together and precisely processed by lathes, the entire drum beating is controlled within 5-10 silk.

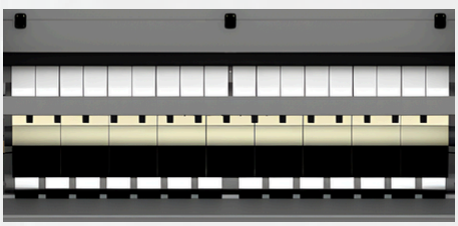

- The bottom frame of the CLM tunnel washers is designed with a 200mm thickness H-type heavy structure steel. Not easy to deform during transportation, and the strength is good.

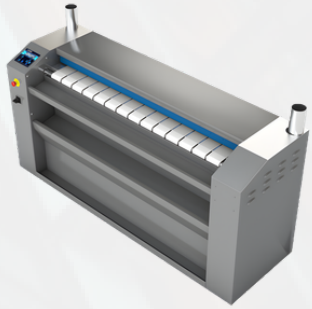

- Bottom Transfer. It is not easy to block and damage the linen.

D-14,16,20 BM & D-20,26,33 GOLD
DATA SHEET

GENERAL DETAILS	UNIT	MII-20 ET2	MII-26 ET2	MII-33 ET2	GII-20 ET2	GII-26 ET2	GII-33 ET2
Theoretical output Electric, steam and atmo. gas heating* standard mod. front or rear exit	Kg/h	68	84	115	90	115	160
	Lb/h	150	185	254	198	254	353
Theoretical output Electric, steam and atmo. gas heating* mod. Folder front exit	Kg/h	48	59	81	63	81	112
	lb/h	105	130	177	139	177	247
Theoretical output Electric, steam and atmo. Gas heating* mod. Folder front and rear exit	Kg/h	44	55	75	59	75	104
	lb/l	97	120	165	129	165	229
Theoretical production Radiant gas heating* mod standard front or rear exit	Kg/h	82	100	138	104	132	184
	lb/l	181	220	304	229	291	406
Theoretical production Radiant gas heating* mod folder front exit	Kg/h	57	70	97	73	92	129
	lb/l	127	154	213	160	204	284
Theoretical production Radiant gas heating* mod folder front and rear exit	Kg/h	53	65	90	68	86	120
	lb/l	118	143	198	149	189	264
Roll Ø	mm	500	500	500	650	650	650
	inch	19,69	19,69	19,69	25,59	25,59	25,59
Working width	mm	2	2.6	3.3	2	2.6	3.3
	inch	78,74	102,36	129,92	78,74	102,36	129,92
Height floor-feeding belts	mm	1,17	1,17	1,17	1,17	1,17	1,17
	inch	46,06	46,06	46,06	46,06	46,06	46,06
Working speed standard mod.	m/min	0,5 - 8	0,5 - 8	0,5 - 8	0,5 - 15	0,5 - 15	0,5 - 15
	ft/min	1,6 - 26	1,6 - 26	1,6 - 26	1,6 - 49	1,6 - 49	1,6 - 49
Working speed mod. with folder	m/min	2 - 8	2 - 8	2 - 8	2 - 10	2 - 10	2 - 10
	ft/min	6,5 - 26	6,5 - 26	6,5 - 26	6,5 - 32	6,5 - 32	6,5 - 32
Electronic control	-	ET2	ET2	ET2	ET2	ET2	ET2
No. Program	-	5	5	5	5	5	5
Length folder	-	OPT.	OPT.	OPT.	OPT.	OPT.	OPT.
Rear exit	-	OPT.	OPT.	OPT.	OPT.	OPT.	OPT.
Large surface contact with linen	-	305"	305"	305"	305"	305"	305"
POWER							
Roll motor power	Kw	0,41	0,41	0,41	0,61	0,61	0,61
Fan motor power	Kw	0,25	0,5	0,5	0,5	0,5	0,5
Electric mod.: heating power	Kw	31,5	40,5	54	42	54	72
Electric mod: Total electric power	Kw	32,16	41,41	54,91	43,11	55,11	73,11
Gas mod.: heating power	Kw	40	55	69	52	69	78
Gas mod.: total electric power	Kw	0,66	0,91	0,91	1,11	1,11	1,11
Steam mod. : heating power	Kw	50	64	81	60	76	97
Steam mod.: total electric power	Kw	0,66	0,91	0,91	1,11	1,11	1,11
Steam consumption	Kg/h	50	67	85	60	80	102
Additional electric power standard mod. Rear exit	Kw	0,28	0,28	0,28	0,28	0,28	0,28
Additional electric power mod with folder front exit	Kw	0,66	0,66	0,66	0,66	0,66	0,66
Additional electric power mod with folder front and rear exit	Kw	0,76	0,76	0,76	0,76	0,76	0,76
CONNECTIONS		E	G/S	E	G/S	E	G/S	E	G/S	E	G/S	E	G/S
Tension 230V I + N + T	n° x mm² /A	N/A	3 x 2,5 / 10A	N/A	3 x 2,5 / 10A	N/A	3 x 2,5 / 10A	N/A	3 x 2,5 / 10A	N/A	3 x 2,5 / 10A	N/A	3 x 2,5 / 10A
	n° x AWG/A	N/A	3 x 13 / 10A	N/A	3 x 13 / 10A	N/A	3 x 13 / 10A	N/A	3 x 13 / 10A	N/A	3 x 13 / 10A	N/A	3 x 13 / 10A
Tension 230V III + T	n° x mm² /A	4 x 25 / 100A	4 x 2,5 / 10A	4 x 25 / 125A	4 x 2,5 / 10A	4 x 35 160A	4 x 2,5 / 10A	4 x 25 / 125A	4 x 2,5 / 10A	4 x 35 / 160A	4 x 2,5 / 10A	N/A	4 x 2,5 / 10A
	n° x AWG/A	4 x 3 / 100A	4 x 13 / 10A	4 x 3 / 125A	4 x 13 / 10A	4 x 2 160A	4 x 13 / 10A	4 x 3 / 125A	4 x 13 / 10A	4 x 2 / 160A	4 x 13 / 10A	N/A	4 x 13 / 10A
Tension 400V III + N + T	n° x mm² /A	5 x 16 / 63A	5 x 2,5 / 10A	5 x 16 / 80A	5 x 2,5 / 10A	5 x 25 / 100A	5 x 2,5 / 10A	5 x 16 / 80A	5 x 2,5 / 10A	5 x 25 / 100A	5 x 2,5 / 10A	5 x 25 / 125A	5 x 2,5 / 10A
	n° x AWG/A	5 x 5 / 63A	5 x 13 / 10A	5 x 5 / 80A	5 x 13 / 10A	5 x 3 / 100A	5 x 13 / 10A	5 x 5 / 80A	5 x 13 / 10A	5 x 3 / 100A	5 x 13 / 10A	5 x 3 / 125A	5 x 13 / 10A
Ø Gas inlet	BSP	1"		1"		1"		1/2"		1/2"		1/2"	
Ø Steam inlet	BSP	3/4"		3/4"		3/4"		3/4"		3/4"		3/4"	
Ø Condensed (Steam models)	BSP	1/2"		1/2"		1/2"		1/2"		1/2"		1/2"	
DIMESNSIONS / DIMESNSIONS WITH PACKING													
Net width / Gross width	mm	3110 / 3290		3710 / 3890		4410 / 4590		3110 / 3290		3710 / 3890		4410 / 4590	
	inch	122,4 / 129,5		146,1 / 153,1		173,6 / 180,7		122,4 / 129,5		146,1 / 153,1		173,6 / 180,7	
Net depth (with rear exit open) / gross depth	mm	1175 (1480) / 1360		1175 (1480) / 1360		1175 (1480) / 1360		1175 (1480) / 1360		1175 (1480) / 1360		1175 (1480) / 1360	
	inch	46,3 (58,2) / 53,5		46,3 (58,2) / 53,5		46,3 (58,2) / 53,5		46,3 (58,2) / 53,5		46,3 (58,2) / 53,5		46,3 (58,2) / 53,5	
Net height / Gross height	mm	1780 / 1940		1780 / 1940		1780 / 1940		1780 / 1940		1780 / 1940		1780 / 1940	
	inch	70,1 / 76,4		70,1 / 76,4		70,1 / 76,4		70,1 / 76,4		70,1 / 76,4		70,1 / 76,4	
Net weight / gross weight standard mod.	kg	1130 / 1190		1380 / 1460		1630 / 1730		1389 / 1449		1717 / 1797		1965 / 2065	
	lbs	2491 / 2624		3042 / 3219		3594 / 3814		3062 / 3194		3785 / 3962		4332 / 4553	
Net weight / gross weight standard mod. with rear exit	kg	1160 / 1220		1420 / 1500		1680 / 1780		1419 / 1479		1757 / 1837		2015 / 2115	
	lbs	2557 / 2690		3131 / 3307		3704 / 3924		3128 / 3261		3874 / 4050		4442 / 4663	
Net weight / gross weight mod. Folder front exit	kg	1190 / 1250		1475 / 1555		1760 / 1860		1449 / 1509		1812 / 1892		2095 / 2195	
	lbs	2624 / 2756		3252 / 3428		3880 / 4101		3194 / 3327		3995 / 4171		4619 / 4839	
Net weight / gross weight mod. Folder front and rear exit	kg	1240 / 1300		1535 / 1615		1840 / 1940		1499 / 1559		1872 / 1952		2175 / 2275	
	lbs	2734 / 2866		3384 / 3560		4057 / 4277		3305 / 3437		4127 / 4303		4795 / 5016	
Net volume (with rear exit) / Gross volume	m³	6,50 (7,99) / 8,68		7,76 (9,53) / 10,26		9,22 (11,32) / 12,11		6,50 (7,99) / 8,68		7,76 (9,53) / 10,26		9,22 (11,32) / 12,11	
	ft³	230 (282) / 307		274 (336,42) / 362		326 (399,9) 428		230 (282) / 307		274 (336,42) / 362		326 (399,9) 428	
OTHERS													
Number of fume outlets	N°	1		2		2		2		2		2	
Ø fume outlets	mm	153		153		153		153		153		153	
	inch	6,0		6,0		6,0		6,0		6,0		6,0	
Air Flow	m/h	600		1.2		1.2		1.2		1.2		1.2	
	cfm	353		706		706		706		706		706	
Sound level	dB	65		65		65		65		65		65	
Evaporation power standard mod.	l/h	37		45		62		47		59		83	
	US gallon/h	9,7		11,9		16,4		12,4		15,7		21,9	
Evaporation power mod. Folder front exit	l/h	26		32		43		33		42		58	
	US gallon/h	6,8		8,3		11,5		8,7		11		15,3	
Evaporation power mod. Folder front and rear exit	l/h	24		29		40		30		39		54	
	US gallon/h	6,3		7,7		10,7		8		10,2		14,2	

COMPACT FLATWORK IRONERS
Ø S600-800-1000
DANUBE

Compact S flatwork ironers are designed to maximize efficiency and productivity in laundry processing by saving energy and space.
The range is available in roll diameters of **600, 800 or 1000 mm**, and is specially designed for high productivity while saving space.



MODELS
1. S600-2600
2. S600-3300
3. S800-2600
4. S800-3300
5. S1000-2600
6. S1000-3300

EFFICIENCY
- S models are ironers that dry and irons only, without any folding devices.
- Roll dimensions: working width 2m60 and 3m30, ø 600, 800 or 1000 mm.

EASY TOUCH 2
- **7"** touch screen fully programmable
- **37** available languages, 5 preset programs
- **USB connection:** to import and export data or programmes and update machines without internet connection.

ROBUSTNESS
- Temperature and speed control:
- ◦ between 3 and 10 m/min (ø 600 mm)
- ◦ between 3 and 13 m/min (ø 800 mm)
- ◦ between 4 and 18 m/min (ø 1000 mm)

ERGONOMICS
- Frequency inverter.
- Feeding and ironing by Nomex quality belts.
- Panels in white painted steel.
- Polished steel roll with fingers guard.

MAINTENANCE
- Easy access to all components on both sides of the machine.
- Complete technical menu: statistics, auto test, data recovery for technician and maintenance.
- Remote communication: faster intervention.

OTHERS
- Big output capacity: depending on the residual moisture of the linen,straight from a high spin washer extractor:
- ◦ up to 140 kg/h (ø 600 mm)
- ◦ up to 220 kg/h (ø 800 mm)
- ◦ up to 290 kg/h (ø 1000 mm)

FEATURES



- 1 or 2 working lanes: 1 lane for bed sheets and 2 lanes for table cloth and small items.



- Dries and irons in a single operation straight from a high-spin washer.

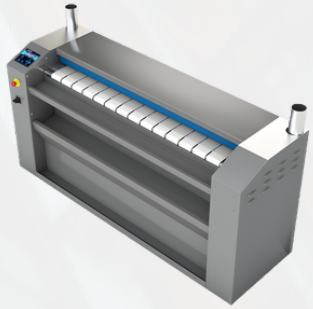

- The ironers are available in two working widths: 2m60 and 3m30, and 3 types of heating: electric, gas or steam.

Ø S600-800-1000
DATA SHEET

GENERAL DETAILS	Unit	S600-2600	S600-3300	S800-2600	S800-3300	S1000-2600	S1000-3300
Theoretical production* elec/steam/atm. Gas heating	Kg/h	125	160	170	220	225	290
Theoretical production* radiant gas burner	Kg/h	-	-	195	253	257	331
Roll Ø	mm	600	600	800	800	1	1
Working width	mm	2.6	3.3	2.6	3.3	2.6	3.3
Height fl oor-feeding	mm	1.05	1.05	970	1.05	1.05	1.05
Working speed	mt/min	3-10	3-10	3-13	3-13	4-18	4-18
Control type	-	Digital	Digital	Digital	Digital	Digital	Digital
N° of programs	N°	20	20	20	20	20	20
POWER							
Electric heating	Kw	54	54	72	72	90	90
Max. electric power electric heating	Kw	55,9	55,9	74,2	74,2	92,6	92,6
Gas heating (natural / LPG)	Kw	63,30 / 67,40	80,30 / 86,30	86,95 / 91,70	124,70 / 124,10	120,90 / 121,30	155,70 / 159,10
Max. electric power gas heating	Kw	1,9	1,9	2,2	2,2	2,6	2,6
Steam heating	Kw	55	75	85	110	120	150
Max. electric power steam heating	Kw	1,9	1,9	2,2	2,2	2,6	2,6
CONNECTIONS							
Ø Gas inlet	BSP	1"	1"	1"	1"	1"	1"
Ø Steam inlet (12 bar max.)	BSP	1"	1"	1"	1"	1-1/4"	1-1/4"
Ø Condensed (steam models)	BSP	1/2"	1/2"	1/2"	1/2"	1"	1"
Ø Air inlet	BSP	12	12	12	12	12	12
DIMESNSIONS / DIMESNSIONS WITH PACKING							
Net width / Gross width	mm	3.670 / 3.830	4.370 / 4.530	3.790 / 3.900	4.480 / 4.600	3.790 / 4.000	4.490 / 4.570
Net depth / Gross depth	mm	1.440 / 1.620	1.440 / 1.620	1.770 / 2.280	1.770 / 2.280	2.090 / 2.280	2.090 / 2.280
Net height / Gross height	mm	2.030 / 1.960	2.030 / 1.960	2.200 / 2.140	2.200 / 2.140	2.430 / 2.400	2.430 / 2.400
Net weight / Gross weight	Kg	1.800 / 2.050	2.050 / 2.350	2.350 / 2.700	2.550 / 3.050	3.100 / 3.550	3.700 / 4.250
Volume	m³	10,73 / 12,16	12,77 / 14,38	14,76 / 19,03	17,45 / 22,44	19,25 / 21,89	22,80 / 25,01
OTHERS							
Number of fume outlets	Nb	2	2	2	2	2	2
Ø fume outlets	mm	120	120	160	160	160	160
Extraction rate	m3/h	2 x 1.000	2 x 1.000	2 x 1.000	2 x 1.000	2 x 1.000	2 x 1.000
Compressed air consumption (6,5 bar)	mm	5	5	5	5	5	5
Noise level	dB	70	70	70	70	70	70

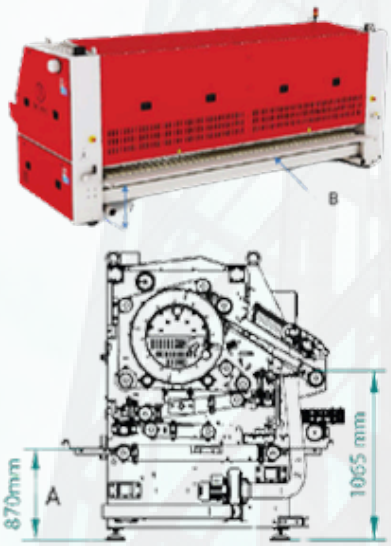



A. Compressed air inlet
B. Rear collector
C. Condensed discharge (steam model)
E. Electrical connection
F. Fumes extraction
G. Gas inlet
V. Steam inlet

	H	I	T	S	A	C	E	F	G	V
S1000-2600	2.166	3.242	186	152	Ø 12	1/2"	5 x 2,5	Ø 120	1"	1-1/4"
S1000-3300	2.166	3.942	186	152	Ø 12	1/2"	5 x 2,5	Ø 120	1"	1-1/4"

COMPACT FLATWORK IRONERS
Ø SPE600-800-1000
DANUBE

SPE compact ironers are designed to maximize efficiency and productivity in laundry processing, while saving energy and space. The range is available in **600, 800 or 1000 mm** cylinder diameters, and is specially designed to deliver high productivity while saving space.



MODELS
1. SPE600-2600
2. SPE600-3300
3. SPE800-2600
4. SPE800-3300
5. SPE1000-2600
6. SPE1000-3300

EFFICIENCY
- SPE models are ironers that dries, irons and folds with a lengthwise and crosswise folder.
- They can be equipped with a stacker as option: 2 models available.
- Roll dimensions: working width 2m60 and 3m30, ø 600, 800 or 1000 mm

EASY TOUCH 2
- **7"** touch screen fully programmable
- **37** available languages, 5 preset programs
- **USB connection:** to import and export data or programmes and update machines without internet connection.

ROBUSTNESS
- 1 or 2 working lanes: one for bedsheets and two lanes for table cloth and small pieces.
- Length fold (1 or 2 folds) and crossfold (up to 3 folds).
- Folding by photocells and compressed air.
- 2 types of stacker as option, with possibility to program the number of stacked items.

ERGONOMICS
- Frequency inverter.
- Feeding and ironing by Nomex quality belts.
- Panels in white painted steel.
- Polished steel roll with fingers guard.

MAINTENANCE
- Easy access to all components on both sides of the machine.
- Complete technical menu: statistics, auto test, data recovery for technician and maintenance.
- Remote communication: faster intervention.

OTHERS
- Big output capacity: depending on the residual moisture of the linen,straight from a high spin washer extractor:
  - up to 140 kg/h (ø 600 mm)
  - up to 220 kg/h (ø 800 mm)
  - up to 290 kg/h (ø 1000 mm)

FEATURES



- Digital control: creation of programmes with speed (between 3 and 18 m/min), temperature and folding parameters.



- 1 or 2 working lanes: 1 lane for bedsheets and 2 lanes for table cloth and small items.

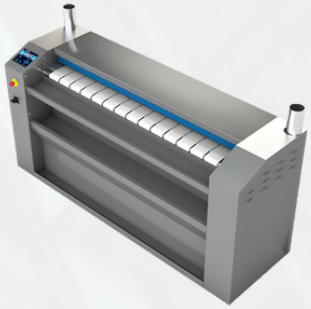

- Longitudinal folding (1 or 2 folds) and cross folding (up to 3 folds).

Ø SPE600-800-1000
DATA SHEET

GENERAL DETAILS	Unit	SPE 600-2600	SPE 600-3300	SPE 800-2600	SPE 800-3300	SPE 1000-2600	SPE 1000-3300
Theoretical production* elec/steam/atm. Gas heating	Kg/h	125	160	170	220	225	290
Theoretical production* radiant gas burner	Kg/h	-	-	195	253	257	331
Roll Ø	mm	600	600	800	800	1	1
Working width	mm	2.6	3.3	2.6	3.3	2.6	3.3
Height fl oor-feeding	mm	1.05	1.05	1.05	1.05	1.05	1.05
Working speed	mt/min	1-12	1-12	3-13	3-13	4-18	4-18
Control type	-	Digital	Digital	Digital	Digital	Digital	Digital
N° of programs	N°	20	20	20	20	20	20
Side stacker	N°	Opt	Opt	Opt	Opt	Opt	Opt
FOLDING							
1 lane - lengthfold	N°	1-2	1-2	1-2	1-2	1-2	1-2
1 lane - crossfold	N°	1-2-3	1-2-3	1-2-3	1-2-3	1-2-3	1-2-3
2 lanes - lengthfold	N°	1-2	1-2	1-2	1-2	1-2	1-2
2 lanes - crossfold	N°	1-2	1-2	1-2	1-2	1-2	1-2
POWER							
Electric heating	Kw	54	54	72	72	90	90
Max. electric power electric heating	Kw	57,1	57,1	75,5	75,5	93,4	93,4
Gas heating (natural / LPG)	Kw	63,30 / 67,40	80,30 / 86,30	86,95 / 91,70	124,70 / 124,10	120,90 / 121,30	155,70 / 159,10
Max. electric power gas heating	Kw	3,1	3,1	3,5	3,5	3,9	3,9
Steam heating	Kw	55	75	85	110	120	150
Max. electric power steam heating	Kw	3,1	3,1	3,5	3,5	3,9	3,9
CONNECTIONS							
Ø Gas inlet	BSP	1"	1"	1"	1"	1"	1"
Ø Steam inlet (12 bar max.)	BSP	1"	1"	1"	1"	1-1/4"	1-1/4"
Ø Condensed (steam models)	BSP	1/2"	1/2"	1/2"	1/2"	1"	1"
Ø Air inlet	BSP	12	12	12	12	12	12
DIMESNSIONS / DIMESNSIONS WITH PACKING							
Net width / Gross width	mm	3.740 / 3.900	4.440 / 4.600	3.740 / 3.900	4.440 / 4.600	3.740 / 3.900	4.440 / 4.600
Net depth / Gross depth	mm	2.210 / 2.280	2.210 / 2.280	2.210 / 2.280	2.210 / 2.280	2.290 / 2.300	2.290 / 2.300
Net height / Gross height	mm	2.040 / 1.970	2.040 / 1.970	2.300 / 2.230	2.300 / 2.230	2.480 / 2.290	2.480 / 2.290
Net weight / Gross weight	Kg	2.686 / 3.050	3.080 / 3.680	3.350 / 3.750	3.730 / 4.330	3.960 / 4.410	4.460 / 5.110
Volume	m³	16,86 / 17,52	20,02 / 20,66	19,01 / 19,83	22,57 / 23,39	21,24 / 20,54	25,22 / 24,23
OTHERS							
Number of fume outlets	Nb	2	2	2	2	2	2
Ø fume outlets	mm	120	120	160	160	160	160
Extraction rate	m3/h	2 x 1.000	2 x 1.000	2 x 1.000	2 x 1.000	2 x 1.000	2 x 1.000
Compressed air consumption (6,5 bar)	mm	15	15	19	19	21	21
Sound level	dB	70	70	70	70	70	70

Compact stacker (roll-off)

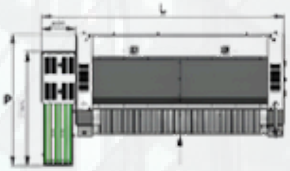

Standard side stacker

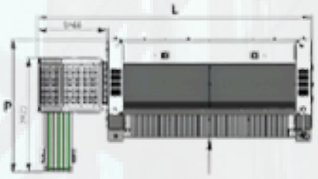

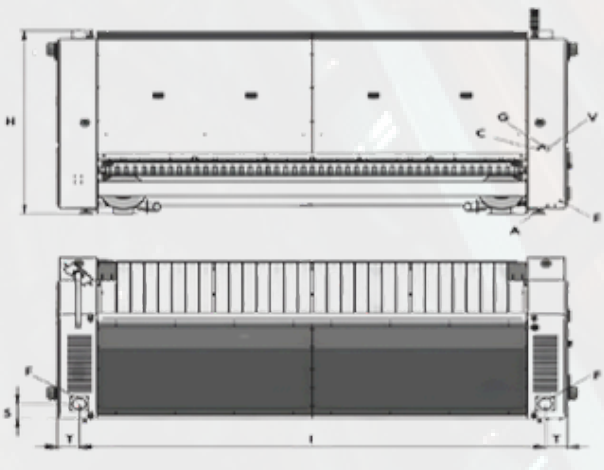

A. Compressed air inlet
C. Condensed discharge (steam model)
E. Electrical connection
F. Fumes extraction
G. Gas inlet
V. Steam inlet

Compact stacker (roll-off)

	L	P
SPE1000-2600	4.425	2.385
SPE1000-3300	5.125	2.385

Standard stacker

	L	P
SPE1000-2600	5.105	2.476
SPE1000-3300	5.805	2.476

FLATWORK IRONER EASY LINE
EL-FI-100-120-150 Ø 25/160-180-200 Ø 33
IMESA

The IMESA **Easy FI flatwork ironer** series is unique: dedicated to customers who look for a simple but high-performance flatwork ironer.

MODELS
1. EL FI 100/25
2. EL FI 120/25
3. EL FI 150/25
4. EL FI 160/33
5. EL FI 180/33
6. EL FI 200/33



TOUCH SCREEN
- The IMESA Easy FI flatwork ironer series is equipped with analog control system, digital thermostat for temperature regulation, fixed ironing speed (adjustable with inverter on request) and fixed ironing pressure.

FEATURES
- Fixed or adjustable (opt.) ironing speed, fixed pressure.
- Heating chest in chromed steel, rather than aluminium - less expansion and surface porosity.

SYESTEM
- The IMESA Easy FI ironers are available 100-120-150cm long/diam. 25cm or 160-180-200cm long/diam. 33cm.
- New aesthetic and optimized machine dimensions.

EFFICIENCY
- Start and stop ironing foot control, adjustable feed table position.
- NOMEX roller cover, frequency variator for electronic control of ironing speed, vacuum, IoT (wi-fi connection) for remote control of the machine and cloth collection tray.

TORSION
- Cotton roller cover, chromed steel heating chest.
- Uniform chest pressure throughout the entire length of the roller for top quality ironing.

OTHERS
- Safety devices: manual handle release, emergency stop, chest lifting pedal.
- Available with or without suction (on request).

FEATURES



- Ironing Speed control on request.



- Analog control units, adjustable ironing parameters, digital thermostat for temperature control.

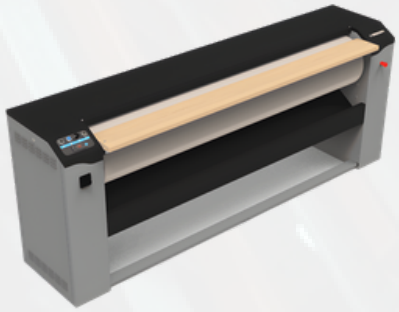

- Cloth collection tray.

EL-FI-100-120-150 Ø 25/160-180-200 Ø 33
DATA SHEET

TECHNICAL DATA	EL FI 100/25	EL FI 120/25	EL FI 150/25	EL FI 160/33	EL FI 180/33	EL FI 200/33
Ironing surface	1000 mm (39.3 inch.)	1200 mm (47.2 inch.)	1500 mm (59 inch.)	1600 mm (62.9 inch.)	1800 mm (70.8 inch.)	2000 mm (78.7 inch.)
Roller diameter Ø	250 mm (9.8 inch.)	250 mm (9.8 inch.)	250 mm (9.8 inch.)	330 mm (12.9 inch.)	330 mm (12.9 inch.)	330 mm (12.9 inch.)
Hourly production**	25 kg/h (55 lb/h)	30 kg/h (66 lb/h)	35 kg/h (77 lb/h)	40 kg/h (88 lb/h)	50kg/h (110 lb/h)	60 kg/h (132 lb/h)
Evaporation**	5 lt/h	6 lt/h	7 lt/h	8 lt/h	10 lt/h	12 lt/h
Rotation speed (Easy model)	3 mt/min	3 mt/min	3 mt/min	3 mt/min	3 mt/min	3 mt/min
Rotation speed (Easy + inverter model)	1÷6 mt/min	1÷6 mt/min	1÷6 mt/min	1÷6 mt/min	1÷6 mt/min	1÷6 mt/min
Humid air (pos. 1) Ø	(opt.) 80 mm (3.1 inch.)	(opt.) 80 mm (3.1 inch.)	(opt.) 80 mm (3.1 inch.)	(opt.) 80 mm (3.1 inch.)	(opt.) 80 mm (3.1 inch.)	(opt.) 80 mm (3.1 inch.)
Humid air flowrate	(opt.) 160 m³/h	(opt.) 160 m³/h	(opt.) 160 m³/h	(opt.) 160 m³/h	(opt.) 160 m³/h	(opt.) 160 m³/h
Air sound intensity	46 db (A)	46 db (A)	46 db (A)	46 db (A)	46 db (A)	46 db (A)
Heating emission (maximum power)***	3%	3%	3%	3%	3%	3%
Feet thread	M10	M10	M10	M10	M10	M10
Machine dimension : WxDxH (100 mm = 3.93 inch.)	1550x643x985 mm	1750x643x985 mm	2050x643x985 mm	2150x643x985 mm	2350x643x985 mm	2550x643x985 mm
Net weight	117,4 Kg (258.8 lb)	-	147,6 Kg (325.4 lb)	180 Kg (400 lb)	196,8 Kg (433.8 lb)	213,8 Kg (471.3 lb)
Standard packing dimension WxDxH (100 mm = 3.93 inch.)	1600x645x1140 mm	1800x645x1140 mm	2100x645x1140 mm	2200x645x1140 mm	2400x645x1140 mm	2600x645x1140 mm
Wooden cage dimension WxDxH (100 mm = 3.93 inch.)	1668x713x1294 mm	1868x713x1294 mm	2168x713x1294 mm	2268x713x1294 mm	2468x713x1294 mm	2668x713x1294 mm
Gross weight	142 Kg (313 lb)	-	177 Kg (390.2 lb)	216 Kg (476.2 lb)	229 Kg (504.8 lb)	249 Kg (548.9 lb)
Standard packaging volume	1,17 mc (41.3 ft³)	1,32 mc (45.9 ft³)	1,54 mc (54.3 ft³)	1,61 mc (56.8 ft³)	1,76 mc (62.1 ft³)	1,91 mc (67.4 ft³)
Wooden cage packaging volume	1,54 mc (54.3 ft³)	1,72 mc (60.7 ft³)	2 mc (70.6 ft³)	2.1 mc (74.1 ft³)	2.3 mc (81.2 ft³)	2.5 mc (88.2 ft³)
STD. packed machines in to 20' container	24 pz.****	18 pz.****	18 pz.****	18 pz.****	6 pz.	6 pz.
STD. packed machines in to 40' container	50 pz.****	36 pz.****	36 pz.****	36 pz.****	15 pz.	12 pz.
ELECTRIC HEATING DATA						
Electrical Heating	4,5 kW	5,4 kW	7,3 kW	7,3 kW	10,5 kW	13,8 kW
Total Power	4,7 kW	5,6 kW	7,5 kW	7,5 kW	10,7 kW	14,0 kW
Absorptions (3 ph 400V-440V (+N) / 3 ph 230V / 1 ph 230V 50/60 Hz)	7 / 13 / 22 A	9 / 15 / 26 A	11 / 19 / 33 A	17 / 23 / 35 A	18 / 32 / 55 A	20 / 35 / 61 A
Hourly consumption**	4,1 kWh	4,9 kWh	6,0 kWh	9,0 kWh	10,1 kWh	11,2 kWh

Pos. 1 - Humid air; Pos.
2 - Electrical power supply; Pos.
3 - 4 Feet (M10) Pos.
4 - Fixing to the ground (Ø 13mm); Pos.
5 - Emergency button; Pos.
6 - Chest safety release

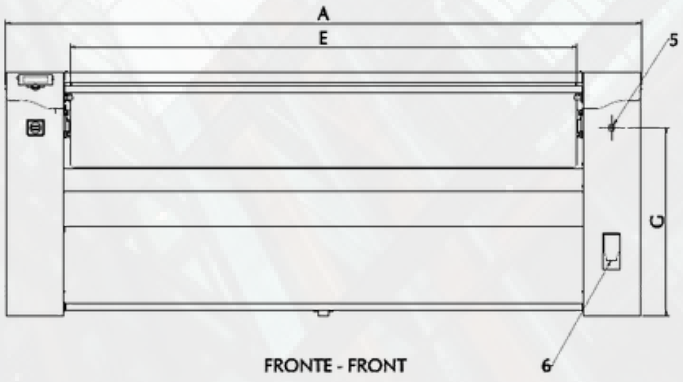

FRONTE - FRONT

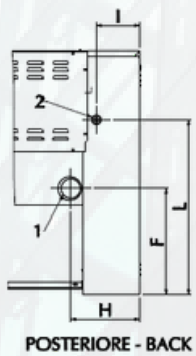

POSTERIORE - BACK

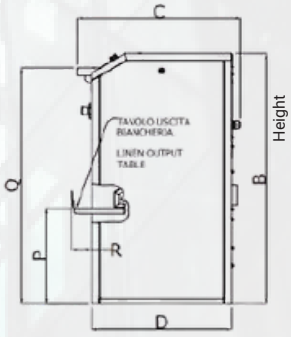

DESTRA - RIGHT



mm	A	B	C	D	E	F	G	H	I	L	M	N	O	P	Q	R
EL FI 160/33	2150	985	643	552	1630	426	760	279	175	705	1754	480	1910	500	930	77
EL FI 180/33	2350	985	643	552	1830	426	760	279	175	705	1954	480	2110	500	930	77
EL FI 200/33	2550	985	643	552	2030	426	760	279	175	705	2154	480	2310	500	930	77

FLATWORK IRONER SMART LINE
SL-FI-100-120-150 Ø 25/160-180-200 Ø 33
IMESA

The IMESA **Smart FI flatwork ironer series** is unique: top performance and maximum productivity. The IMESA Smart FI flatwork ironer series is equipped with the most modern devices to make the work in the laundry efficient, simple and safe.

MODELS
1. SL FI 100/25Ø
2. SL FI 120/25Ø
3. SL FI 150/25Ø
4. SL FI 160/33Ø
5. SL FI 180/33Ø
6. SL FI 200/33Ø



TOUCH SCREEN
- IM10 digital control system: intuitive for easy interaction. Ironing parameters can be modified after the cycle is started.
- Programmes with customizes temperature and speed for different types of fabric for perfect ironing, even with difficult creases.

FEATURES
- Thick» function: delays the closing of the roller for an easier introduction of the fabric.
- Uniform **ironing pressure** over the entire length of the roller, electronically controlled **for an excellent ironing result.**

SYESTEM
- The IMESA Smart FI ironers are available 100-120-150cm long/diam. 25cm or 150-180-200cm long/diam. 33cm.
- Electronic **ironing speed control** by inverter.

EFFICIENCY
- The linear action device allows the ironing pressure control in order to adapt the program to the type of fabric treated.
- Cool down system useful to save energy and preserve over time the good state of the roller coating.

TORSION
- The torsion bar guarantees the uniform pressure of the chest all over the entire length of the roller, to get the best ironing results.
- Start and stop ironing pedal.

OTHERS
- The patented technology confirms the absolute uniqueness of the IMESA flatwork ironer.
- Heating chest in chromed steel, rather than aluminium - less expansion and surface porosity.

FEATURES



- IM.10 computer touch screen



- Nomex chest cover, resistant to high temperature.



- Longitudinal folding (1 or 2 folds) and cross folding (up to 3 folds).

MCM DRYING IRONERS SERIES
MCM 2500 – 2800 – 3200
IMESA

IMESA **MCM series** drying ironers guarantee high performance and reliability.
Designed for maximum ironing quality, the complete MCM range is the ideal linen ironing solution for restaurants, hotels, nursing and retirement homes and hospitals.

MODELS
1. MCM 250/Ø50
2. MCM 280/Ø50
3. MCM 320/Ø50

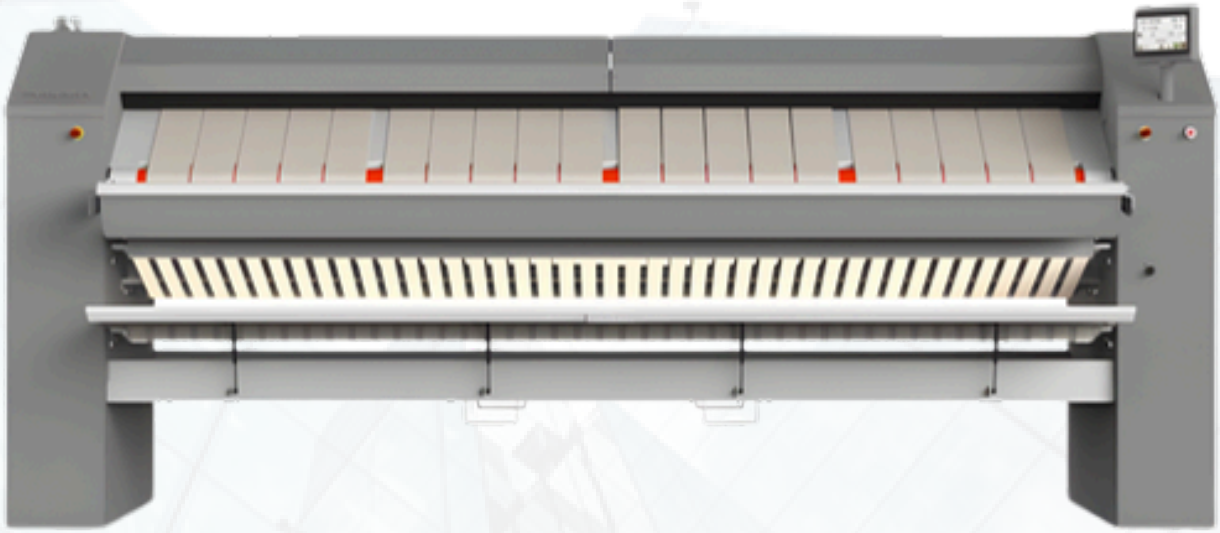

TOUCH SCREEN
- IM10 computer touch screen for easy programming and monitoring of drying cycles.
- Like a real tablet, the IM10 touch screen has the same intelligibility, ergonomics and potential as a computer.

FEATURES
- The linen remains in contact with the roller for 82% of its circumference perimeter.
- System cooldown: saves energy and helps preserve the ironing belts.

SYESTEM
- Available in BASIC version with front/back MOTORISED OUTPUT, FOLDER and automatic FEEDER.
- Available with motorised linen exit on two sides: faster ironing, higher productivity and more than one operator.

EFFICIENCY
- Parameters can be modified during the cycle.
- Available with suction feed table for perfect fabric feed, enabling a single operator to iron and fold even large items.

ROLLER
- IMESA MCM series 502 mm diam. drying ironers are available with 2500 mm, 2800 mm and 3200 mm roller.

OTHERS
- Models with automatic FEEDER and FOLDER are equipped with PLC control with 128 ironing programs.
- Available with suction feed table for perfect fabric feed, enabling a single operator to iron and fold even large items.

FEATURES



- Memorisation of infinite ironing programmes.



- System cooldown: saves energy and helps preserve the ironing belts.

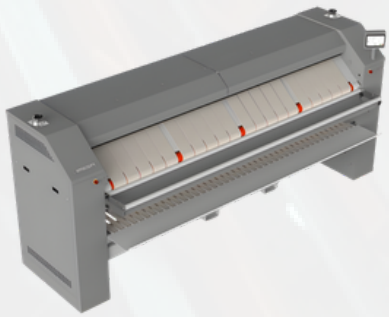

- 3 heating methods: electric, steam, gas.

MCA DRYING IRONERS SERIES
MCA 150-180-210
IMESA

IMESA **MCA drying ironers** are designed to guarantee continuous production and high quality ironing.
The compact size and possibility of installation against a wall make MCA models ideal for restaurants, pubs and small/medium sized hotels.

MODELS
1. MCA 150/Ø33
2. MCA 180/Ø33
3. MCA 210/Ø33



TOUCH SCREEN
- IM10 computer touch screen for easy programming and monitoring of drying cycles.
- Like a real tablet, the IM10 touch screen has the same intelligibility, ergonomics and potential as a computer.

EFFICIENCY
- The inverter fitted as standard electronically regulates ironing speed for maximum productivity on the basis of the moisture in the fabric and ironing temperature.

FEATURES
- Automatic speed/temperature compensation: the speed of the roller is set automatically according to the temperature, facilitating the operator's work and guaranteeing top quality results.

ROLLER
- IMESA MCA series 33 mm diam. drying ironers are available with 150 cm, 180 cm and 210 cm roller.
- NOMEX feed and ironing belts, resistant to very high temperatures.

SYESTEM
- System cooldown: saves energy and helps preserve the ironing belts.
- All parts in movement during ironing are inaccessible: the operator can rely on total protection and work with absolute peace of mind.

OTHERS
- Openable cover for easy maintenance.
- The hand safety bar prevents hands and arms from being accidentally inserted in the space between the roller and the chest and avoids dragging of excessively thick fabric or objects.

FEATURES



- Memorisation of infinite ironing programmes.

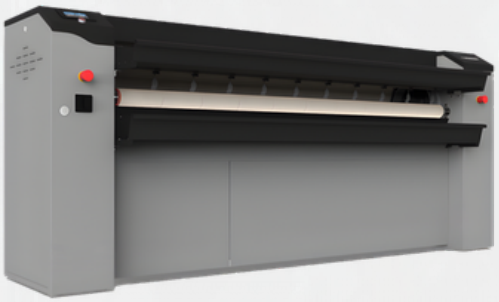

- Parameters can be modified during the cycle.



- 2 heating methods: electric or gas.

SMALL-PIECE FEEDER BASIC PLUS JENSEN

The Jenfeed Basic Plus combines the wellknown features of the three former JENSEN feeders, Basic, BK Short and BK Air in one machine, ensuring optimum feeding quality and optimum ergonomic working conditions in front of the feeder.

MODELS
1. BASIC PLUS



TOUCH SCREEN

- Accurate feeding requires ultra fast and accurate control.
- The Jentrol HMI PLC control system represents the recent and most advanced PLC control system with touch–screen ensuring optimum control of the feeding parameters.

MODELS

- Working width: 3000 mm to 4200 mm Number of lanes: 1 to 6 lanes Max. speed: 30 meter per minute.

STANDARD VACUUM BOX

- The vacuum box stretches the linen and is supplied with individually adjustable suction forces to ensure optimum stretching of the linen disregarding linen type and thickness. As standard, the Jenfeed Basic Plus is supplied with a vacuum box handling a linen length of up to 1500 mm.

STRETCH CONVEYOR

- An optional stretch conveyor positioned on top of the delivery conveyor stretches the piece before entering the ironer.

MAN-MACHINE INTERFACE

- The Jentrol HMI control system features a fast and accurate processor, an easy-to-use manmachine interface, multi-language facilities and an option for remote system service

OTHERS

- Minutes in operation since reset of category · Piece count per category and in total · Events, such as jam, recent alarms, and errors.

FEATURES



- Fast feeding



- Optimum ergonomic working conditions



- Multi-purpose feeder

LARGE-PIECE FEEDERS
BASIC PLUS
JENSEN

The Jenfeed Basic Plus combines the wellknown features of the three former JENSEN feeders, Basic, BK Short and BK Air in one machine, ensuring optimum feeding quality and optimum ergonomic working conditions in front of the feeder.

MODELS
1. KLIQ FEEDER
2. KLIQ PLUS



TOUCH SCREEN
- The Jentrol HMI control system features a fast and accurate processor, an easy-to-use human-machine interface, multi-language facilities and an option for remote system service.

FEATURES
- The new transfer beam operating with a mechanical holding bar instead of vacuum suction, the feeding quality of the leading edge of the linen stays the same over time, as it is not depending on any vacuum suction force.

STANDARD VACUUM BOX
- KliQ feeder incorporating a high positioned vacuum box allowing to deliver the piece at a high position, a pit in the floor may not be required for linen with a length of up to 2200 mm (86.6").

EASY CLAMP
- The design of the feeding clamp has been shaped to guide the corner of the linen into the clamp, allowing the operators to quickly and easily load the clamps, resulting in a high and constant production.

EASY FEEDING
- The KliQ feeder is supplied with a feeding table that can be lowered to reach the optimum ergonomic manual feeding position for small pieces or round table linen. The lowering of the feeding table is carried out fast and easy by activating a hold-to-run button, well known from the Logic Plus range.

OTHERS
- Direct feeding into the ironer reduces the foot-print and increases the feeding quality thanks to the fact that no inlet table on the ironer is required.

FEATURES



- Fast feeding of bed linen.



- Optimum ergonomic working conditions.



- Top-quality feeding of table linen.

IRONING EXP SERIES
EXP/EXP-2000/EXPG/EXPG-2000
JENSEN

The Jensen EXP High-capacity, steam heated ironer with optimized evaporation capacity by the flexible chest.



MODELS
1. EXP
2. EXP-2000
3. EXPG
4. EXPG-2000

TOUCH SCREEN
- The control panels will give the following information and warning in one view:
- Speed indication
- The current (ampere) used by the drive motor (indication starts flashing when waxing is needed)
- Temperature of exhaust and condensate
- Steam, inlet pressure, Ironing pressure & Warning Lights.

HIGH EVAPORATION
- Due to the higher evaporation capacity of the large diameter roll, the JENROLL EXPress 2000 evaporates more moisture than a traditional ironer incorporating a chest of a smaller diameter.
- This moisture is led through flange mounted steam traps positioned below the chest.

CONTACT ANGLE
- A traditional fixed chest loses contact when the padding wears out and the roll diameter is reduced.

FLEXIBLE CHEST
- The flexible chest consists of two layers of sheet metal welded together in a matrix pattern by a laser.
- This sandwich plate is rolled to the roll diameter and blasted with high pressure, thus forming small steam channels between the weldings.

EXHAUST CONTROL
- The exhaust control adjusts the roll to the optimal vacuum in order to prevent the padding from becoming moist and at the same time the roll from cooling down.
- The convection losses will be reduced to a minimum if they are adjusted to this optimum.

OTHERS
- Direct feeding into the ironer reduces the foot-print and increases the feeding quality thanks to the fact that no inlet table on the ironer is required.

FEATURES



- Excellent Control panel

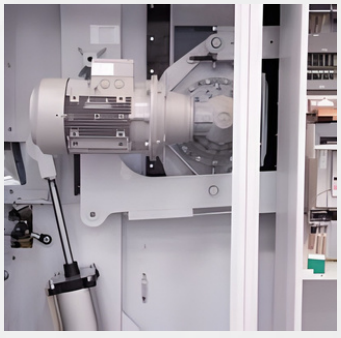

- Excellent finishing quality.



- Reduced energy consumption

IRONING FLATWORK FEEDERS
FLEXFEED SP 300 - 400
FOLTEX

The Flexfeed SP300-400 is a vacuum-assisted, manual feeding machine for small and large flatwork pieces.

MODELS
1. SP300
2. SP400

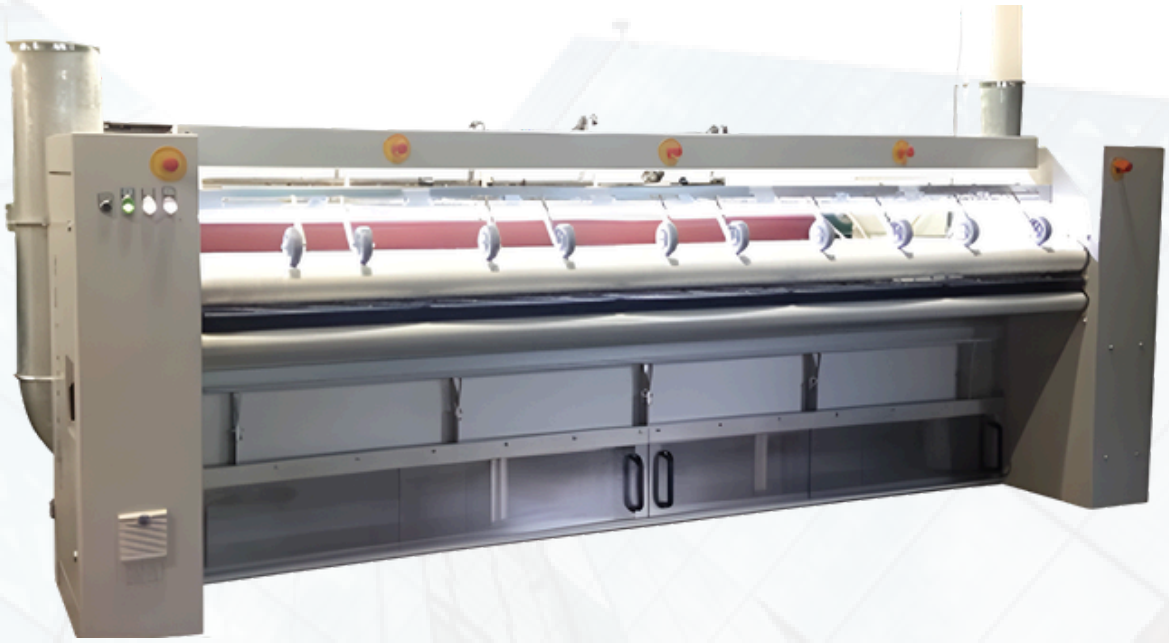

HIGHLIGHTS

- The Flexfeed SP300 – 400 is a vacuum assisted, manual feeding machine for small and large flatwork pieces. Compatible with any industrial ironing machine, it is capable of handling manually fed pieces in 1 to 6 lanes.
- The Flexfeed SP300 – 400 is a rigid, durable but equally simple machine that requires minimal maintenance. It produces unsurpassed feeding quality that places far ahead of it's market competitors.

HOW DOES IT WORK?

- Pieces fed onto the in-feed nose conveyor are driven forward with the help of the in-feed wheels, which hold the piece on the belts as the trailing edge is stretched out in the high-power vacuum box.
- This vacuum power can be adjusted for different articles, which in combination with the high-speed, in-feed roller produces a highly effective "shaking out" performance. An LED light and laser-guides assist operators to feed accurately at high-speeds.
- The FlexFeed SP300-400 uses just one drive motor, which, by using a simple flat-belt drives the high-speed in-feed roller.
- There is a variable friction system that allows the roller to be stopped by hand for safety reasons, which, coupled with the fact that the roll-ends are mounted within the confines of the side panels, makes Flexfeed one of the safest machines on the market.

FEATURES



- Excellent Control panel

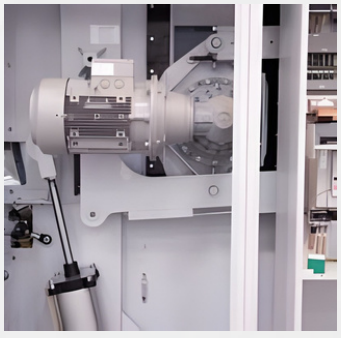

- Excellent finishing quality.



- Reduced energy consumption

IRONING FLATWORK FEEDERS
FLEXFEED LP1 - 300 - 400
FOLTEX

The **FlexFeed LP1** is a highly versatile flatwork feeder, able to feed both small and large pieces of flatwork; sheets, duvets, tablecloths, napkins, pillow-slips - it's perfect for them all.

MODELS
1. LP1-300
2. LP1-400



HIGHLIGHTS

- Versatile feeder including spreader clamps for all kinds of small and large flatwork giving the best flexibility and quality.
- The FlexFeed LP1 is a flatwork feeder that delivers flexibility, reliability and simplicity in one compact package.
- The FlexFold LP1 can process small and large items in single and multi-lane mode and is available in various working widths with one or two feeding stations (LP1 and LP2).

TECHNICAL SPECIFICATIONS

- Number of feeding stations: 1 or 2
- Working width: 3000, 3300, 3500, 4000mm
- Number of lanes: 1 or 2
- Air pressure: 4 bar
- Air consumption: <1m3/hr
- Power supply: 3 x 380 – 415V, 50/60Hz, 3 ph
- 3 x 208 – 240V, 50/60Hz, 3 ph
- 3 x 480V, 60Hz, 3ph
- Power consumption: 6.6 kWh

FEATURES



- Excellent Control panel

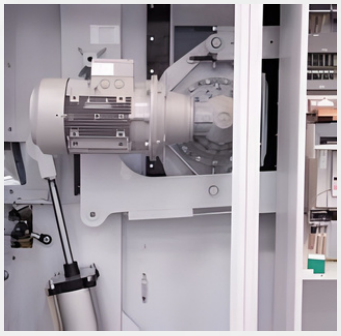

- Excellent finishing quality.



- Reduced energy consumption

IRONING FLATWORK FEEDERS
FLEXFEED LP2 - 300 - 400
FOLTEX

The **Flexfeed LP2** is a highly versatile, high-quality flatwork feeder offering excellent productivity for a full range of large or small-piece flatwork linen i.e sheets, duvets, fitted-sheets, table-linen, napkins, pillow-slips, aprons etc.

MODELS
1. LP2-300
2. LP2-400



HIGHLIGHTS

- **Two Feeding Stations**

There are two twin-clip feeding stations on either side of the machine where two corners of large-pieces can be clamped in position. A highly efficient, high-accuracy servo-driven, pair of server clamps visits each feeding station, retrieves each piece and the simultaneously spreads and positions the pieces centrally on the feed-nose.

- **High-Power Suction Box**

The tail of the large piece is sucked over a spinning feed-roller which helps it into a deep suction box driven by two, high-power, frequency inverter controlled fans.

TECHNICAL SPECIFICATIONS

- Air Pressure: 4 bar
- Air Consumption: <1cfm
- Power Supply: 3 x 380 – 415V, 50/60Hz, 3 ph
  3 x 208 – 240V, 50/60HZ, 3 ph
  3 x 480V, 60Hz, 3 ph
- Power Consumption: 10 kWh
- Working widths of 3000mm, 3300mm, 3500mm, 3700mm and 4000mm.
- ª Single and Twin lane versions available.
- ª Modified feed-nose for direct-feed.
- ª Full Synchronisation with ironer / folder.

FEATURES



- Excellent Control panel

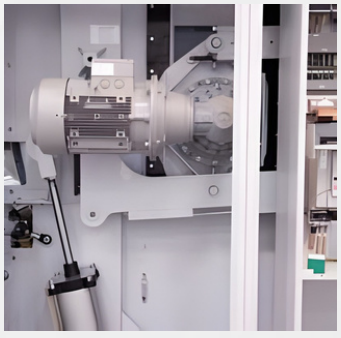

- Excellent finishing quality.



- Reduced energy consumption

IRONING FLATWORK FEEDERS
FLEXFEED LP 3/4 - 300 - 400
FOLTEX

The **FlexFeed LP3/4** is a feeder which combine quality with productivity. The patented design ensures full control over the leading edge offering highest feeding quality.

MODELS
1. LP 3/4-300
2. LP 3/4-400



HIGHLIGHTS

- The FlexFeed LP4 is a versatile feeder for wide range of items like sheets, duvet covers, table cloths napkins and pillow cases. The FlexFeed LP4 is provided with 4 inferred stations and is able to work with any ironer. The patented in-feed stations lift the item up after feeding and transfers it to servo controlled spreader clamps.
- After spreading a high power suction beam moves underneath the spreader item (see picture) for highest feeding quality. No pit is needed as linen is hanging freely after lift in Like all other Foltex machines the FlexFeed LP4 is designed with lowest maintenance in mind and thanswer when a simple and solid feeder is required.

TECHNICAL SPECIFICATIONS

- Available working widths:3000/3300/3500/4000mm
- Number of feeding stations: 3 or 4
- Number of lanes for large pieces: 1 or 2
- Number of lanes for small pieces: 4
- Number of spreader clamps: 2, 3 or 4
- Capacity: up to +1200 pc/hr
- USB back-up facility: included
- Remote monitoring: included

FEATURES



- Excellent Control panel

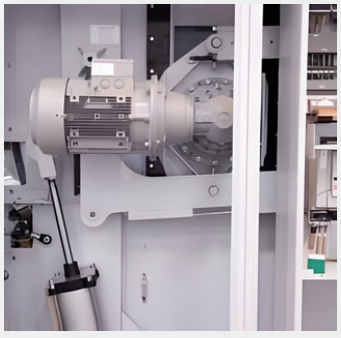

- Excellent finishing quality.



- Reduced energy consumption

FLATWORK FOLDERS & DRYWORK FOLDERS

Efficient laundry packing machines designed to streamline workflow and protect garments. Reliable, fast, and perfect for commercial laundries and textile facilities.

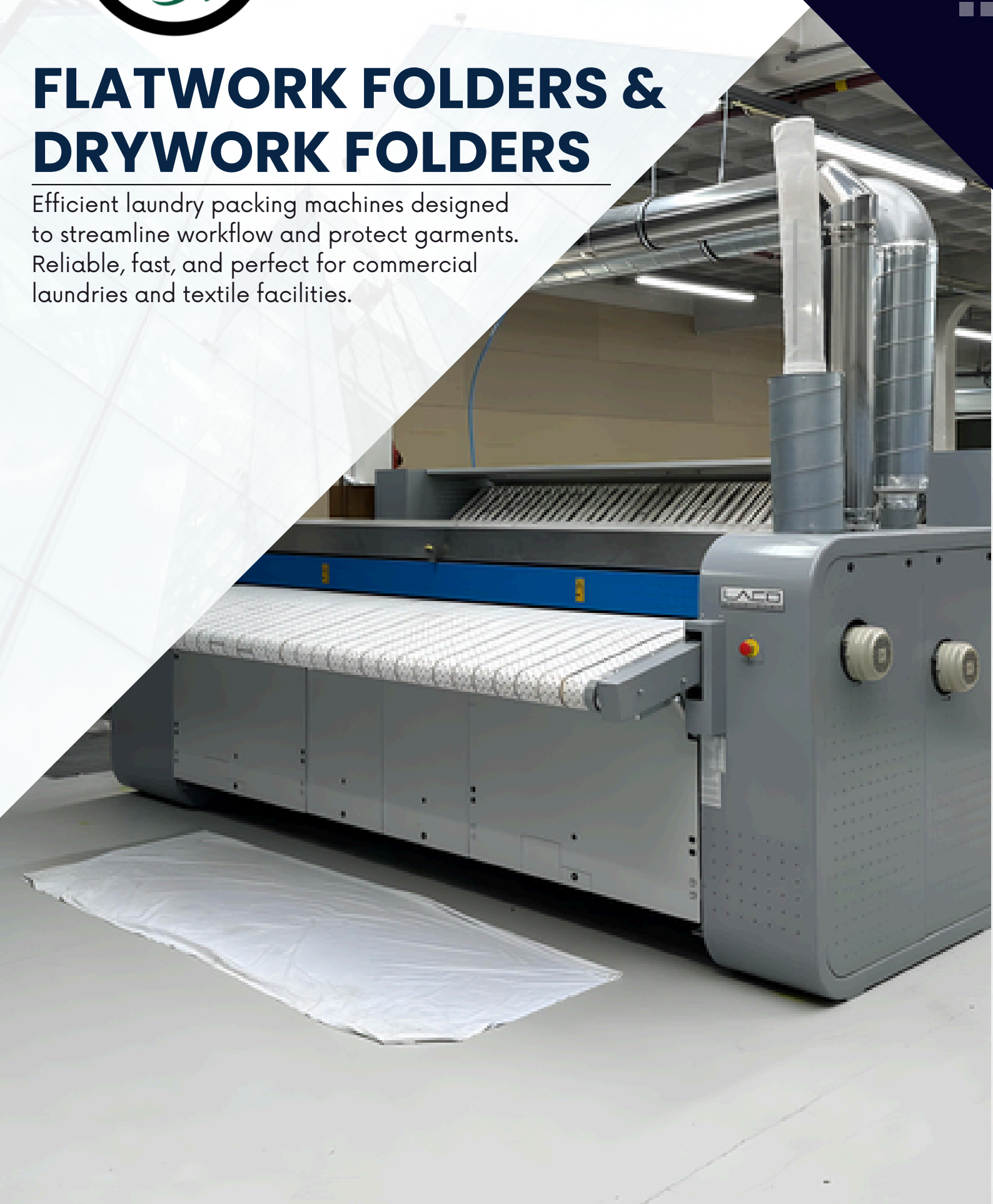

FLATWORK FOLDERS
FLEXFOLD LP300 – 400
FOLTEX

The **FlexFold LP300-400** differs from other folders because of its simple yet durable design which achieves both high quality folding and high production rates.

MODELS
1. LP 300
2. LP 400



HIGHLIGHTS

- The FlexFold LP300-400 is available in single and multi lane configurations. In either configuration, the FlexFold LP300-400 makes 2 or 3 primary folds in up to 4 lanes and 1, 2 or 3 (internal) cross folds.
- Each piece is measured before it enters the first primary fold. The microprocessor selects the appropriate primary fold accordingly.
- Once folded, the piece is measured again prior to entering the cross fold section to accomplish the desired cross fold. After the cross folds are made, the piece is discharged towards the stacker station.

FEATURES

- Strong rigid simple design.
- Maintenance-free transmission due to timing belts / flat belt drive. No chains, so no lubrication required.
- Simple frequency driven motors instead of complicated high maintenance mechanical clutch/brake devices.
- Maintenance-free proximity photocells instead of troublesome reflectors.
- Automatic speed synchronization with ironer (8 – 50 m/min).
- Automatic rejection of misfed / misaligned pieces.
- Reject for re-wash or repair.
- Double blow tubes in primary folds.
- First cross fold rollers open automatically in case of jam.
- Adjustable speed of primary fold and cross fold section.

FEATURES



- Optional reject scanner.

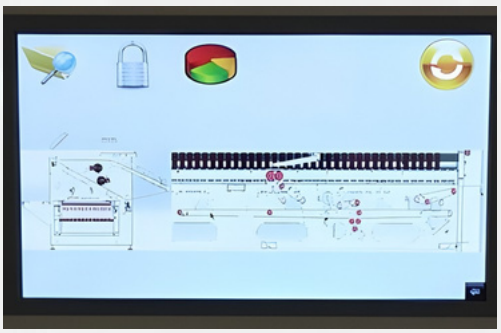

- It has a colour touchscreen with a simple concise layout and user-friendly operation.



- The laterals folds are carried out by air knives forcing the linen between two pinch rollers.

FLATWORK FOLDERS
FLEXSTACK SM SMALL PIECE STACKER
FOLTEX

The **FlexStack SM small piece stacker** Integrated small piece stacker, available up to 6 lanes.

MODELS
1. LP 300
2. LP 400



HIGHLIGHTS

- Can be integrated on any FlexFold LP sheet folder and can be activated in those programs where pillow cases or napkins to be stacked.
- Both folded and unfolded small pieces can be stacked.

FEATURES

- Strong rigid simple design.
- Maintenance-free transmission due to timing belts / flat belt drive. No chains, so no lubrication required.
- Simple frequency driven motors instead of complicated high maintenance mechanical clutch/brake devices.
- Maintenance-free proximity photocells instead of troublesome reflectors.
- Automatic speed synchronization with ironer (8 – 50 m/min).
- Automatic rejection of misfed / misaligned pieces.
- Reject for re-wash or repair.
- Double blow tubes in primary folds.
-

FEATURES



- First cross fold rollers open automatically in case of jam.

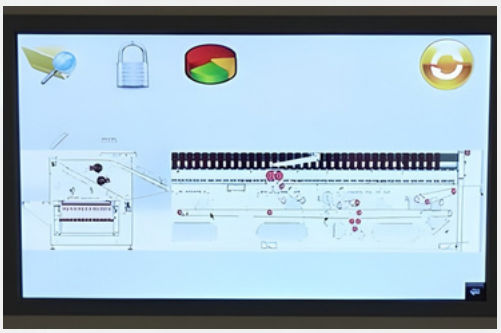

- It has a colour touchscreen with a simple concise layout and user-friendly operation.



- Adjustable speed of primary fold and cross fold section.

FLATWORK FOLDERS

FLEXFOLD FF600/800/1000 SMALL PIECE FOLDER/STACKER

FOLTEX

Versatile small piece folder/stacker for accurate folding and stacking. Can be used as stand-alone or situated behind the folder.

MODELS
1. FF600
2. FF800
3. FF1000



HIGHLIGHTS

- The FlexFold FF is a small piece folder which can be located directly behind an ironer for folding napkins and pillow cases or used stand-alone for all sorts of dried linen and garments.

FEATURES

Maximum piece width: 720mm (wider models on request)
Maximum piece length: 1050mm (longer models on request)
Piece width after folding: 150 - 220mm (smaller on request)
Number of lateral folding blades: 2
Number of lateral folds: 4
Number of cross folding blades: 2
Number of cross folds: 2
Maximum stacking height: 150mm
3 x 380-415V, 50/60Hz or 3 x 208-240V, 50/60Hz (other supplies on request) Power consumption: 1.6 kWh

FEATURES



- Control System

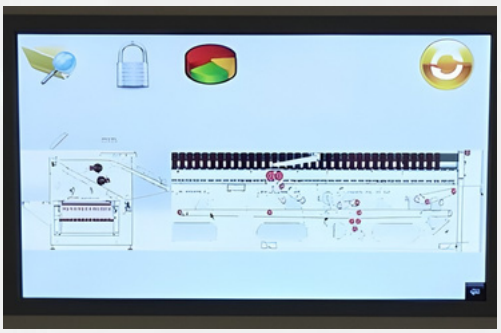

- IT has a colour touchscreen with a simple concise layout and user-friendly operation.

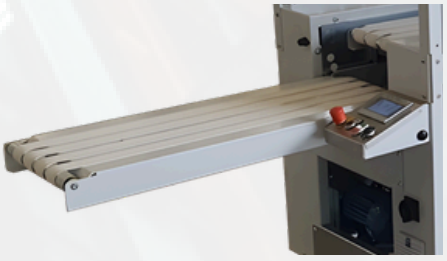

- The FlexFold FF is the answer when accurate folding is required.

FLATWORK FOLDERS
FLEXFOLD RO800 / 1000 SMALL PIECE FOLDER/STACKER
FOLTEX

The **FlexFold RO1000** can be used as small piece folder directly behind the ironer or behind a large piece folder. The **RO1000** is making up to 2 lateral folds and 2 cross folds.

MODELS
1. RO800
2. RO1000



HIGHLIGHTS

- The FlexFold RO1000 can be used as small piece folder directly behind the ironer or behind a large piece folder. The RO1000 is making up to 2 lateral folds and 2 cross folds.
- Pre-sorting is no longer required, the RO1000 recognizes the item and makes the preset folding accordingly.
- Small pieces can be folding in many different folding patterns, however the FlexFold RO1000 is unique in its kind as it is also able to flatstack (no folding) small pieces.

FEATURES

- Strong rigid simple design.
- Maintenance-free transmission due to timing belts / flat belt drive. No chains, so no lubrication required.
- Simple frequency driven motors instead of complicated high maintenance mechanical clutch/brake devices.
- Maintenance-free proximity photocells instead of troublesome reflectors.
- Automatic speed synchronization with ironer (8 – 50 m/min).
- Automatic rejection of misfed / misaligned pieces.
- Reject for re-wash or repair.
- Double blow tubes in primary folds.
- First cross fold rollers open automatically in case of jam.
- Adjustable speed of primary fold and cross fold section.

FEATURES



- Optional reject scanner.

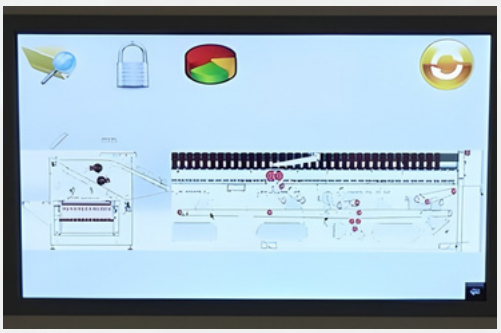

- TheFlexFold LP300-400 hasa colour touchscreen with a simple concise layout and user-friendly operation.



- The laterals folds are carried out by air knives forcing the linen between two pinch rollers.

DRYWORK FOLDERS
FLEXFOLD AT180 SLIM_INLINE
FOLTEX

The FlexFold AT180_slim is a French folder with smallest foot print on the market

MODELS
1.AT 180 Slim Inline



HIGHLIGHTS

- Slim folder for high production rates, able to fold towels, pads, patient gowns etc. Able to process up to 1800pc/hr.
- The fastest French style folder on the market, while still offering and outstanding folding quality.
- Able to fold a whole range of items, due to the ability to make automatic folding adjustments in size and thickness.

FEATURES

- Maximum piece dimensions: 180x90cm.

FEATURES



- Optional reject scanner.

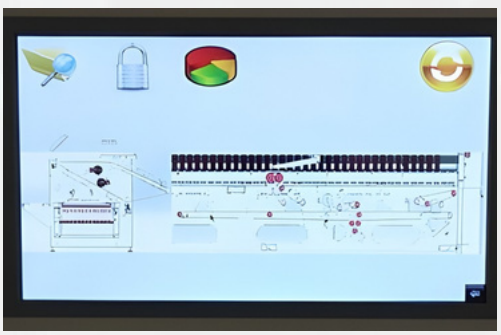

- TheFlexFold LP300-400 hasa colour touchscreen with a simple concise layout and user-friendly operation.



- The laterals folds are carried out by air knives forcing the linen between two pinch rollers.

DRYWORK FOLDERS
FLEXFOLD AT180 SLIM_INLINE/SLIM
FOLTEX

The FlexFold AT180_slim/slim is a French folder with smallest foot print on the market.

MODELS
1. AT 180 Slim Inline
2. AT 180 slim



HIGHLIGHTS

- Slim folder for high production rates, able to fold towels, pads, patient gowns etc. Able to process up to 1800pc/hr.
- The fastest French style folder on the market, while still offering and outstanding folding quality.
- The most compact French folder on the market, while still able to fold pieces up to 180x90cm. When space is limited, the AT180_slim could be the answer. Autograding onto 3 grading stackers.

FEATURES

- Maximum piece dimensions: 180x90cm.
- Maximum piece length: 180cm / 70"
- Maximum piece width: 90cm / 35"
- Electrical consumption: 1.5 kWh
- Power supply: 3 x 380/415V, 50/60Hz 3 x 208/240V, 50/60Hz
- Air consumption: 15 m3 /hr
- Air pressure: 6 bar
- Machine dimensions (without incline belt): 319 x 106 x 139 cm (lxwxh) - 126"x41"x54" (lxwxh)
- Machine weight: 1200 kg

FEATURES

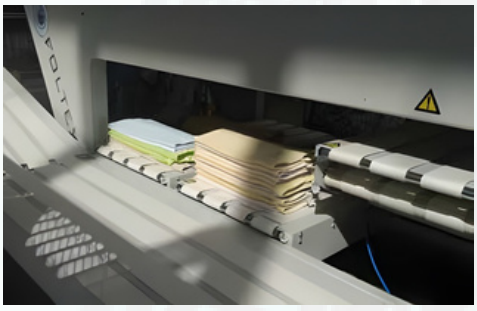

- A Systems Diagnostics function greatly simplifi es problem / fault rectifi cation.

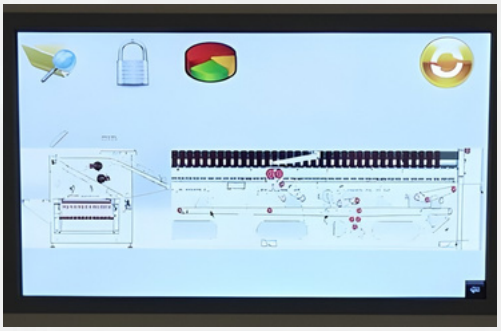

- It has a colour touchscreen with a simple concise layout and user-friendly operation.

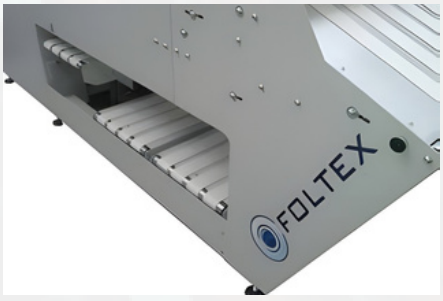

- Up to 2 cross folds can be made, offering all kinds of folding patterns required nowadays.

DRYWORK FOLDERS
FLEXFOLD AT230
FOLTEX

The FlexFold AT180/AT230 towel folder is the perfect solution for folding and stacking all kinds of towels, garments, fitted sheets and other tumbler dried pieces.





MODELS
1. AT 180 Slim Inline
2. AT 180 slim

HIGHLIGHTS

- The FlexFold AT180/AT230 can be used for all kinds of towels, from small face towel until the largest (and heaviest) pool towels.
- The FlexFold AT180/AT230 has the unique design for processing very light as well as very heavy pieces. Furthermore it is able to fold all kinds of light garments (T-shirts, trousers, hospital clothing/uniforms) and fitted sheets.
- One of the features of the AT180/AT230 is the quality stop, allowing complicated pieces to make an additional stop for rear end (trailing edge) correction.

FEATURES

- The FlexFoldAT180/AT230 is an open design and can be adapted to your specifications. Some of the standard options are:
- Garment folding system. The FlexFold AT180/AT230 is able to fold all kinds of towels and also various garments. Long garments however should be fed with collar down in order to get nice presentation after folding. This option allows you to fold all kinds of light and heavy garments (with simple color up feeding), also overalls.
- Longitudinal fold made by folding blades instead of air.
- Production monitoring system.

FEATURES

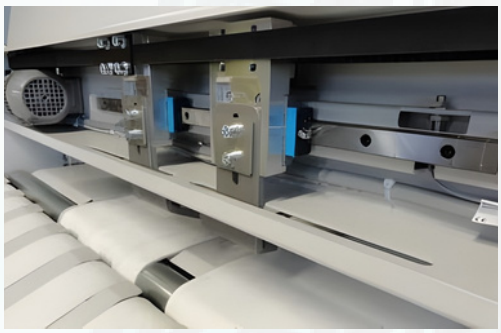

- The longitudinal fold(s) are made by position controlled folding templates in combination with a pulsed air flow.

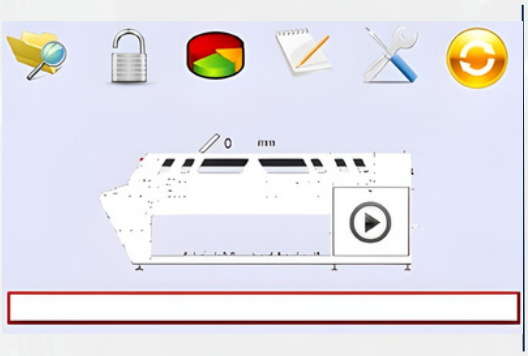

- TheFlexFoldAT180/AT230 has a colour touchscreen with utmost simple lay-out.



- Up to 2 cross folds can be made, offering all kinds of folding patterns required now a days.

DRYWORK FOLDERS
FLEXFOLD MT200
FOLTEX

The MT200 is the ideal small piece folder for those customers who prefer folding by means of folding blades instead of pulsed air flow.

MODELS
1. MT200



HIGHLIGHTS

- An operator puts the piece onto the infeed conveyor. This piece is automatically recognized by sensors and will thereafter automatically be folded by mechanical blades and sorted onto the dedicated stacker station.
- Due to this automatic sorting system, no manual pre-sort is needed. As a result, each folding program can handle up to 4 different pieces, which are automatically recognized, folded and dispatched on dedicated stacker station. After the preset stack height is achieved, pile with folded pieces is put onto the final incline conveyor belt.

FEATURES

- Maximum piece length: 200cm / 78" 120cm
- Maximum piece width: / 47" 1.5 kWh 3 x
- Electrical consumption: 380/400V, 50 or
- Power supply: 60Hz 3 x 230/240V, 50 or 60Hz 5 m^3/hr 6
- Air consumption: bar
- Air pressure:
- Machine dimensions without incline belt:369 x 141 x 137cm (lxwxh) 145 x 55 x 54" (lxwxh)
- Machine dimensions with incline belt: 476 x 194 x 137 cm (lxwxh) 187x76x54" (lxwxh)
- Machine weight: 1580 kg

FEATURES

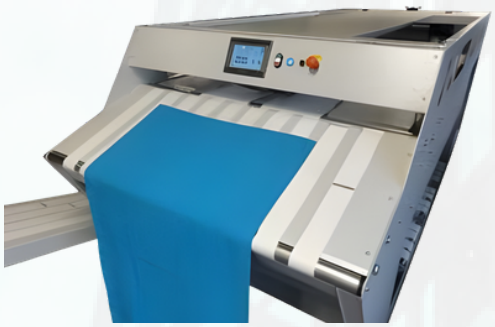

- Pieces are put on the infeed conveyor belt.



- The stack is brought onto the final incline belt by means of a slide mechanism ensuring a smooth and straight transfer.

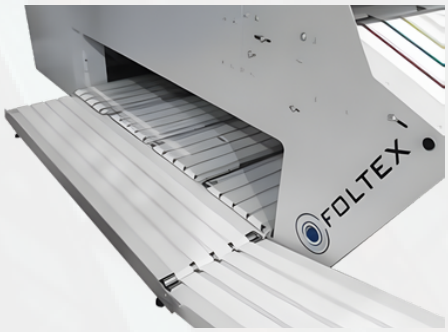

- After the cross folding, the various kinds of folded pieces have to be sorted out on one of the stacker stations.

DRYWORK FOLDERS
FLEXFOLD BT300
FOLTEX

The FlexFold BT300 is a versatile blanket folder for processing all kinds of thin and thick blankets until a size of 300x300cm.

MODELS
1. BT300



HIGHLIGHTS

- The FlexFold BT300 has 2 lateral folds and 2 cross folds (3rd cross fold is optional). The lateral folds are made by air pulse. Double air tubes are applied in each fold. The pressure of the 2nd lateral fold is selectable between low and high pressure.
- The cross folds are made by knife in combination with reversing belts. After the folding process, the blankets are stacked on the final incline belt by means of a dropstacker. Once reached the required height, the belt is activated.

FEATURES

- Maximum piece dimensions: 300x300cm
- Number of lateral folds: 2,
- Number of cross fold: 3rd is optional
- Number of lanes: 1
- Air supply pressure: 7 bar
- Air consumption: approx. 25m^3/hr
- Power: 3 x 380 – 415V, 50/60Hz, 3 ph
- Consumption: 3.3 kWh

FEATURES

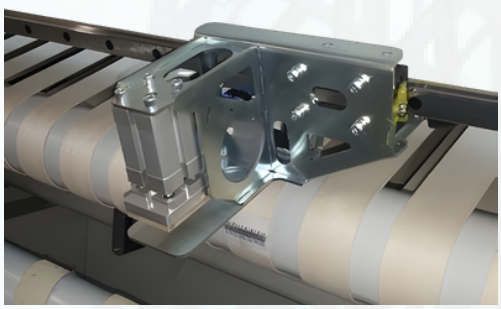

- Pieces are put on the infeed conveyor belt.



- The FlexFold BT300 is a versatile blanket folder for processing all kinds of thin and thick blankets until a size of 300x300cm.



- The FlexFold BT300 is a simple and rigid built blanket folder, which can be operated by either 1 or 2 operators.

DRYWORK FOLDERS
FLEXFOLD AT230_AIRLINE BLANKET
FOLTEX

The FlexFold AT230 is also available in an airline version. Due to additional cross fold and adapted lateral fold section all kind of airline blankets can be folded (and packed).

MODELS
1. AT230 Airline Blanket

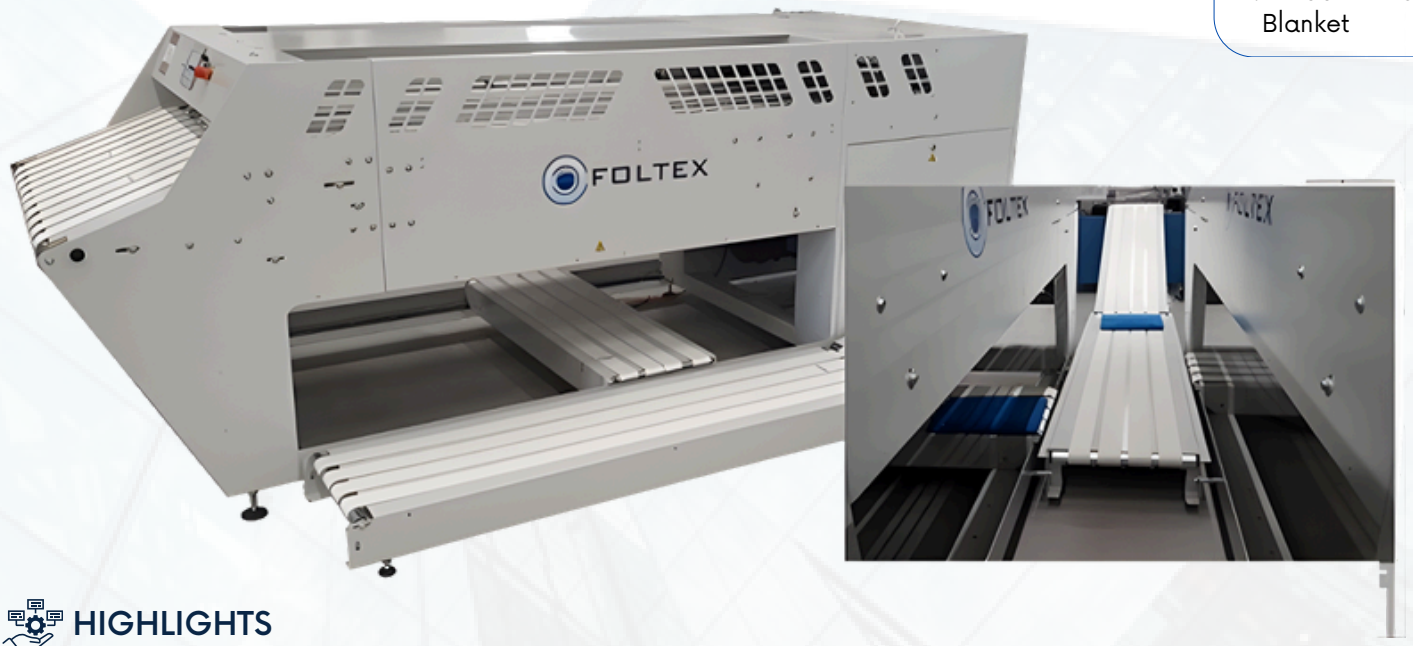

HIGHLIGHTS

- Airline blankets for economy class, business class and first class can be folded and packed.
- The FlexFold AT230 is the most economical way to process all kinds of airline blankets.
- Two machines can be connected so they share one common packing machine.

FEATURES

- Maximum piece dimensions: 300x300cm
- Number of lateral folds: 2,
- Number of cross fold: 3rd is optional
- Number of lanes: 1
- Air supply pressure: 7 bar
- Air consumption: approx. 25m³/hr
- Power: 3 x 380 – 415V, 50/60Hz, 3 ph
- Consumption: 3.3 kWh

FEATURES

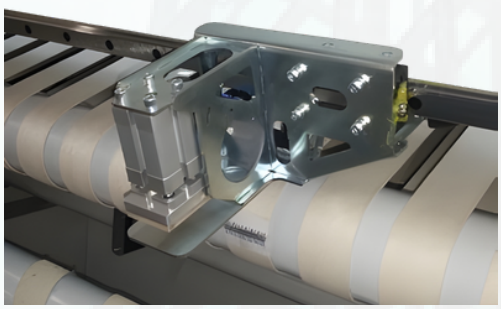

- Pieces are put on the infeed conveyor belt.



- The FlexFold AT230 is a versatile blanket folder for processing all kinds of thin and thick blankets until a size of 300x300cm.



- Two machines can be connected so they share one common packing machine.

GARMENT FOLDERS & STACKERS

Efficient laundry packing machines designed to streamline workflow and protect garments. Reliable, fast, and perfect for commercial laundries and textile facilities.



GARMENT FOLDERS EASYFOLD BATHROBE FOLTEX

The patented **EasyFold Bathrobe** is the first bathrobe folder on the market that is able to fold various bathrobes regardless of dimensions, thickness or weight.

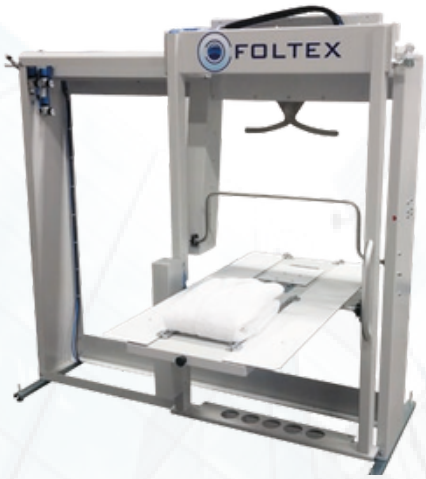



HIGHLIGHTS

- This machine is the answer if you want to improve the folding quality and double your folding capacity of bathrobes. How simple can it be to save labor costs.
- The EasyFold Bathrobe not only increases production, it also improves folding quality and consistency.
- The unit's ergonomic design and its ease of operation makes folding bathrobe simpler than ever before.
- The EasyFold Bathrobe has a very small footprint of only 1.7m².

GARMENT FOLDERS FLEXFOLD FF800T FOLTEX

The **FlexFold FF800T** is ideal for folding healthcare covers, however can also be used for folding all kinds of garments ranging from underpants to thick hoodies.



MODELS
1. FF800T

HIGHLIGHTS

- The FlexFold FF800T is making its folds with folding blades. By means of high power vacuum, the item is kept on its position during folding. Items can be stacked.
- A wide range of covers and garments can be folded.
- By means of the flaps a very compact endsize could be achieved.

GARMENT FOLDERS FLEXFOLD GT200 FOLTEX

The **FlexFold GT200** is provided with 2 infeed conveyors, one for garments, the other for towels.



HIGHLIGHTS

- Dry work folder for folding all kinds of workwear, hospital uniforms, chef jackets/trousers, scrub suits, iso gowns, bathrobes and all kinds of towels.
- The FlexFold GT200 is provided with 2 infeed conveyors, one for garments, the other for towels.
- The GT200 has various automatic adjustments for folding thin items like towels up to the thickest and heaviest overalls.

GARMENT FOLDERS FLEXFOLD MG200/AG220 FOLTEX

The MT200/AG220 is the ideal small piece folder for those customers who prefer folding by means of folding blades instead of pulsed air flow.



HIGHLIGHTS

- The most simple garment folder on the market, able to fold all kinds of garments, light/heavy workwear and towels.
- In the AG execution, the lateral folds are carried out by pulsed air flow, in MG execution by means of mechanical folding blades.
- Besides the ability to fold all kinds of garments, the FlexFold AG/MG can still be used as a towel folder as well. leaflets.

STACKERS
FLEXSTACK SS420
FOLTEX

The **Flexstack SS420** is a state-of-the-art, small-piece folding and flat-stacking machine.



HIGHLIGHTS

- Automatic counting, folding, positioning, stacking and bundling of washing gloves and small towels.
- Washing gloves and small towels can be slides in sideways before being allinged, positioned and stacked.
- Once the stack height is reached (typically 10 or 20), the stacked is bundled by means of elastic rope (no scissors needed to remove and minimum waste).
- A collecting trolley can be put behind the machine.

GARMENT FOLDERS
FLEXSTACK RO500
FOLTEX

The **FlexStack RO500** is principally designed to process ironed pieces like napkins or tumbler dried items such as face cloths, bar mops, cleaning mops, kitchen towels or any other flat piece with maximum dimensions 700 x 500mm.





HIGHLIGHTS

- High speed folding and stacking (or flat stacking only) of face cloths and other mall pieces like microfibres, wipes and towels with first class stacking results. Able to make up to 2 folds.
- Stacking is done by electrical high speed roll off system. Capacities up to 2500pc/hr can be reached.
- The FlexStack RO500 is available in linear or return feed delivery conveyor and available with an automatic bundling unit.

CONVEYOR SYSTEMS

Efficient laundry packing machines designed to streamline workflow and protect garments. Reliable, fast, and perfect for commercial laundries and textile facilities.



CONVEYOR FLEXSTACK SS420 FOLTEX

FlexConvey is redefining smart material handling with efficient, scalable, and future-ready conveyor solutions.



HIGHLIGHTS

- Heavy duty conveyors with integrated drum motor instead of motor with (leaking) gearbox hanging beside the conveyor.
- Heavy duty maintenance free conveyor.

CONVEYOR FLEXBRIDGE FOLTEX

FlexBridge empowers seamless connectivity between systems, streamlining operations with intelligent integration, enhanced efficiency, and a future-ready approach to workflow management.



HIGHLIGHTS

- For perfect transfer onto perpendicular mounted conveyor.
- The FlexBridge is provided with sensors to monitor the traffic on a main conveyor.
- The FlexBridge can be supplied as stand-alone unit with own control system or in case mounted behind Foltex machine, it will be integrated with in machine control.

CONVEYOR FLEX CENTER FOLTEX

FlexCentre stands at the core of operations, bringing everything together with smart coordination, optimized workflows, and a centralized approach to efficiency and performance.

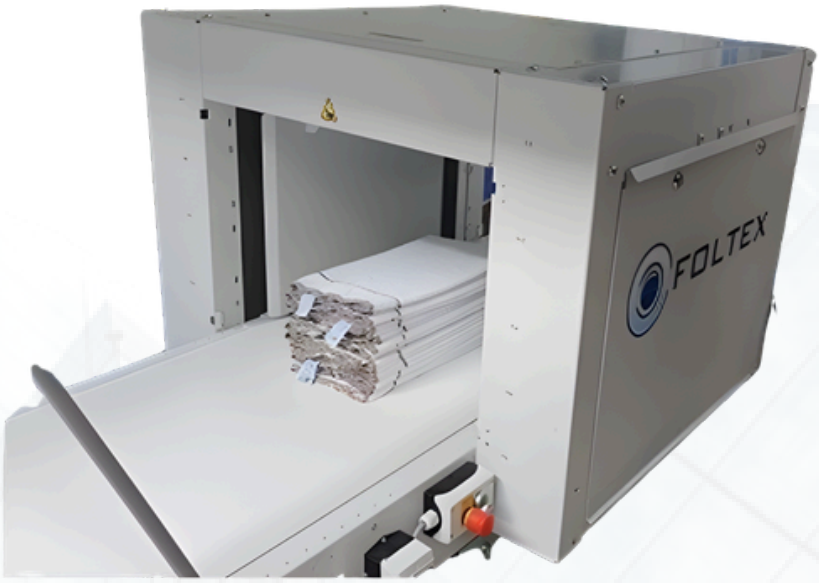

HIGHLIGHTS

- The FlexCentre straightens and positions each piece/stack to the center of the conveyor.
- This way each stack regardless dimensions and stack height is perfectly aligned to enter a packing or wrapping machine.

CONVEYOR FLEXSORT FOLTEX

FlexBridge empowers seamless connectivity between systems, streamlining operations with intelligent integration, enhanced efficiency, and a future-ready approach to workflow management.



HIGHLIGHTS

- Sorting and storing different stacks coming from multiple folders.
- By means of track & trace the FlexSort system knows which kind of item is arriving and consequently knows the dedicated storage line.

PACKING MACHINES

Efficient laundry packing machines designed to streamline workflow and protect garments. Reliable, fast, and perfect for commercial laundries and textile facilities.



COMPACTA SERIES
COMPACTA 5022 TREND/EMS
BVM

The Compacta 5022 Trend/EMS film packaging machine series is suitable for fully automatic packaging.
Working in-line, these light barrier-controlled packaging machines can be loaded both manually and fully automatically.

MODELS
1. COMPACTA 5022 TREND
2. COMPACTA 5022 EMS
3. COMPACTA 7522



The sophisticated packaging system and the associated feed systems enable a peak performance of up to 100 cycles per minute, depending on the model and equipment of the packaging machine.

Easy changeover of the Compacta 5022 Trend film packaging machine series via handwheels/EMS motorised, with size list can be stored on the touch panel, including size data memory . This guarantees short changeover times for the film packaging machine and high production reliability.

HIGHLIGHTS

- Permanently heated sealing system
- Depending on the equipment and model, more than 100 cycles/minute are possible
- Short changeover times
- Simple conversion
- High production reliability
- Depending on the model, size ranges from 450–950 mm are possible

DATA SHEET

TECHNICAL DATA	COMPACTA 5022 TREND	COMPACTA 5022 EMS
Approx. format range: (Prod. width + Prod. height)	450 mm	450 mm
Sealing width	500 mm	500 mm
Pass-through height	220 mm	220 mm
Additional equipment	Can be combined with film folding device, suction slide feeder, stacking and grouping device, pusher unit, etc.	Can be combined with film folding device, suction slide feeder, stacking and grouping device, pusher unit, etc.
Film width	650/650 mm	650/650 mm
Performance	Up to 60 cycles/min*	Up to 100 cycles/min*

SHOES CLEANING MACHINES

Efficient laundry packing machines designed to streamline workflow and protect garments. Reliable, fast, and perfect for commercial laundries and textile facilities



SHOES CLEANING
SCARPAVAPOR NO LIMIT
BIEFFE FARINELLI

The **SCARPAVAPOR LINE** machine is a professional shoe cleaning, sanitizing, and drying system used in shoe care shops, laundries, sports facilities, and retail stores. It is designed to deeply clean and disinfect footwear using steam, detergent, hot air, and ozone technology.



HIGHLIGHTS

- Uses high-pressure steam to remove dirt, stains, and grease from shoes.
- Works on all materials: leather, fabric, rubber, sneakers, boots, etc.
- Steam penetrates deeply without damaging the material.
- Equipped with special brushes that release detergent while cleaning.
- Ensures deep and even cleaning of shoe surfaces.
- Ideal for detailed areas like stitching and soles.
- Built-in rapid drying function using hot air.
- Restores softness and shape of shoes after cleaning.
- Prevents moisture damage and odor formati.

Not limited to shoes, also cleans:

- Bags
- Helmets
- Accessories
- Designed for continuous use in commercial environments.
- Ensures consistent cleaning quality.

Available in models like:

- **SCARPAVAPOR**
- **SCARPAVAPOR NO LIMITS**

Common Accessories Included:

- Steam guns & injection nozzles
- Different brush types (soft, medium, hard for various materials)
- Foam / detergent injectors
- Vacuum extraction hose
- Detail cleaning tools for seams & edge.

ACCESSORIES







SHOES CLEANING
SCARPAVAPOR STEAM GENERATOR
BIEFFE FARINELLI

Scarpavapor® is a professional, strong, and reliable **steam generator** whose main function is the complete cleaning of shoes, inside and outside.



HIGHLIGHTS

- While using Scarpavapor®, the operator injects steam and detergent, then, tanks to the provided specia brushes, he can dissolve and remove even the most stubborn dirt from the shoe's surface, obtaining a fine result.
- This generator provides a high-quality shoe drying and sanitization. The warm air drying is quick and delicate and restores softness.
- The ozone lamp eliminates bacteria and bad smells, thus entirely sanitizing the shoes.

OPTIONAL ACCESSORIES



RIP5187
Triangularbrush nat. bristles 70mm 1/8f



RIP5222
Smallbrush d25 spv m10 st st



RIP5223
Smallbrushd25 spv m10 brass



RIS1102
Framef/Bieffe silicone brush



Detergent s pecial f/interiors w/ enzyme

ACCESSORIES

VACUUM CLEANER RIP2011



Bieffe è promotore dell

SPEEDY FOAM BF427

Foam generator with brush for cod BF425 cod. BFX426S



ntiva il funzionamento come rnativa al consumo



OPERATING DESK
RIP2010



SHOES CLEANING
SCARPAVAPOR BASIC
BIEFFE FARINELLI

The **SCARPAVAPOR BASIC** machine is a professional shoe cleaning, sanitizing, and drying system used in shoe care shops, laundries, sports facilities, and retail stores. It is designed to deeply clean and disinfect footwear using steam, detergent, hot air, and ozone technology.

HIGHLIGHTS



- Extractor hood with light
- Pretreating detergent jet
- Steam brushing
- Steam/ detergent gun
- Foam jet
- Steam and vacuum handle
- Workbench with dirty water draining
- Integrated vacuum cleaner
- Drying/ozone
- Steam/vacuum control pedals

JET FOAM / DETERGENT

VACUUM

DRY

INJECTION/ EXTRACTION

STEAM

OZONIZES AND SANITIZES

OPTIONAL FOR CLEANING CARPETS AND ARMCHAIRS



CVK51
Steam & vacuum extension 1m



CVK20
Pratika steam & vac nozzle -k20



CVT
Triangular steam & vac nozzle 240mm

ACCESSORIES

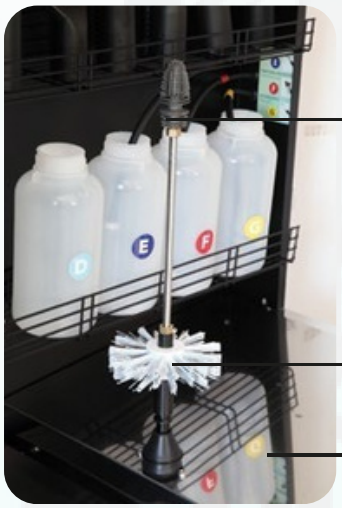

BRUSH FOR SHOES INTERIORS

BRUSH FOR SHOES SOLES

KIT COMPLETEBRUSHES

GENTLE DRYER FOR LEATHER JACKETS



SHOES CLEANING SCARPAVAPOR PLUS
BIEFFE FARINELLI

The **SCARPAVAPOR PLUS** is a compact professional shoe and accessories cleaning machine designed for deep cleaning, sanitizing, and drying using steam, detergent, vacuum, and ozone technology. It is widely used in shoe cleaning businesses, laundries, and retail shops.

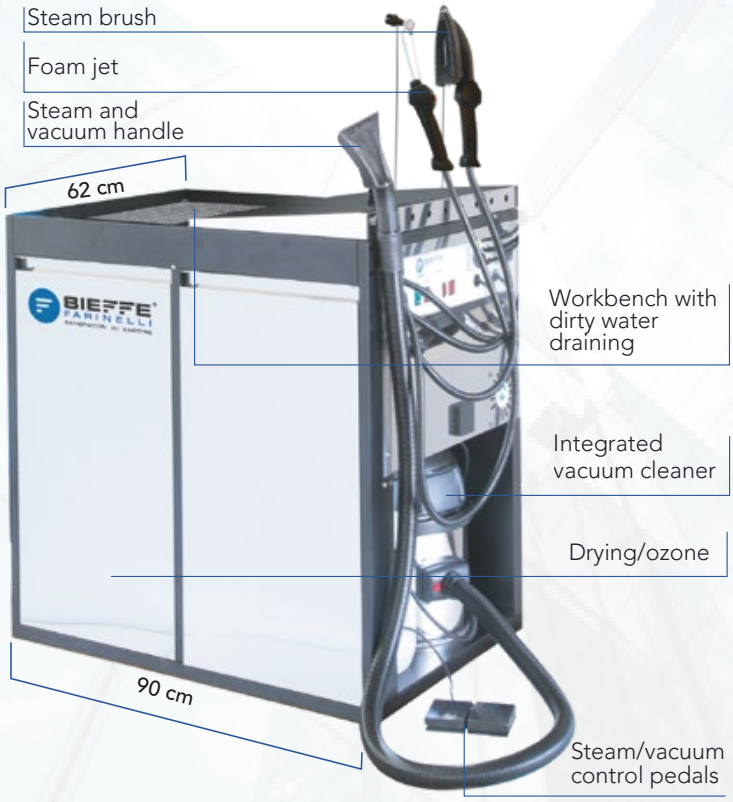

HIGHLIGHTS

STEAM · JET FOAM / DETERGENT · VACUUM · OZONIZES AND SANITIZES · DRY · INJECTION/ EXTRACTION

ACCESSORIES


RIP0921
Steam brush f/ Scarpavapor®


CVK21SC
Steam & vac flexible 2mts f/Scarpavapor® nolimits


RIP0914
Steam Gun Bieffe – Scarpavapor 2 micros


CVK20P
Steam/vacuu m nozzle


RIP0706
Vacuum bent handle with valve diam.35


MGD14
Triangular steam brush bristles 70mm


CVE
Vacuum lance d36


CVK54
Steam & vac nozzle f/ helmets


CVF
Brush black moplen ø36 - f


RIP1482
Scarpavapor® detergent 5lt


CVEB
Steam&vaclance 280mm


CVC2
Vacuum rubber nozzle shoes 80mm


RIP7002
Stretcher f/


CVCS
Small vacuum nozzle w/bristles 110m

SHOES CLEANING SCARPAVAPOR DRYING CABIN
BIEFFE FARINELLI

The **SCARPAVAPOR Drying Cabin** is a dedicated hot-air drying and sanitization unit designed to complement Scarpavapor cleaning machines. It ensures that shoes, boots, and accessories are fully dried and deodorized after steam cleaning. This is crucial for maintaining shoe shape, material quality, and hygiene.



HIGHLIGHTS

- Uses gentle, adjustable hot air (30–60°C)
- Dries shoes quickly without damaging leather, suede, or fabric.
- Prevents mold, odor, and moisture damage.

Optional ozone generator kills:

- Bacteria
- Odor-causing microbes
- Fungi
- Leaves shoes completely sanitized and odor-free
- Removable racks for different sizes
- Adjustable holders for boots, shoes, and delicate materials
- Ensures even air circulation
- Preserves shape, color, and material integrity
- Reduces drying time after cleaning
- Enhances overall hygiene and customer satisfaction
- Complements SCARPAVAPOR PLUS or NO LIMITS machines

WATER PURIFIERS

Our water purifiers combine innovative filtration technology with robust engineering to deliver superior water quality. Built to remove impurities effectively, they ensure consistent performance across residential and commercial environments.



WATER PURIFIER SYSTEM
6 STAGE, 3 STAGE, FLT-1000CA, FLT-2000A, FLT-5000B, SINTERED CARBON FILTER 1000L

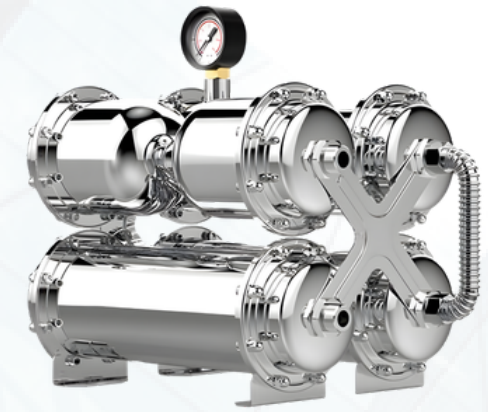

STAINLESS STEEL ULTRA FILTRATION 6 STAGE WATER PURIFIER SYSTEM

- **6-Stage** Ultra Filtration Water Purifier – **304** Stainless Steel. (UF+GAC+CTO+Resin+Mineral+T33)
- Delivers **1200 liters** per hour.
- **Stage 1:** UF Membrane – removes bacteria, viruses, and fine particles
- **Stage 2:** GAC Filter – eliminates chlorine, bad taste, and organic compounds
- **Stage 3:** CTO Filter – further improves taste and removes residual contaminants
- **Stage 4:** Resin Filter – reduces water hardness and prevents limescale
- **Stage 5:** Mineral Filter – adds essential minerals for healthy drinking water
- **Stage 6:** T33 Post-Filter – final polishing for pure, crisp taste.



STAINLESS STEEL ULTRA FILTRATION 3 STAGE WATER PURIFIER SYSTEM

Perfect for residential, commercial, or light industrial applications, this system enhances water quality and extends the lifespan of appliances by preventing scale formation.

Key Features:

- **Stage 1 & 2:** SR (Sediment Removal) filters – removes dirt, sand, and rust
- **Stage 3:** CTO (Carbon Block Filter) – eliminates chlorine, taste, odor, and prevents limescale.
- Anti-limescale protection for appliances and piping systems.
- Stainless steel housing – corrosion-resistant, hygienic, and long-lasting.
- Suitable for kitchens, cafes, clinics, and water pre-filtration systems.



STAINLESS STEEL ULTRA FILTRATION WATER PURIFIER SYSTEM (FLT-1000CA)

Application: Household use, compatible with municipal tap water.
Filtration Accuracy: 0.01 micron – removes bacteria, rust, silt, and harmful particles.

- **Flow Rate: 1000 liters** per hour
- **Flush Type:** Manual flush
- **Material: 304** Stainless Steel housing + PVC hollow fiber membrane
- **Water Pressure Range:** 0.1 – 0.4 MPa
- **Operating Temperature:** 5°C – 45°C
- **Long Life Span:**
  - Stainless Steel Housing: Over 50 years
  - UF Membrane: 3–5 years



STAINLESS STEEL ULTRA FILTRATION WATER PURIFIER SYSTEM (FLT-2000A)

- **Model:** FLT-2000A
- **Flow Rate:** 2000L/H
- **Filtration Precision:** 0.01 micron UF membrane
- **Material: SS304** stainless steel housing + PVC hollow fiber membrane
- **Housing Lifespan:** 50+ years
- **Membrane Lifespan:** 3–5 years
- **Dimensions:** Housing – 130×970mm | UF membrane – 95×900mm



STAINLESS STEEL ULTRA FILTRATION PVDF+SINTERED CARBON FILTER WATER PURIFIER SYSTEM 1000L

- **Filtration Type:** PVDF Ultra Filtration + Sintered Carbon Filter
- **Flow Rate: 1000 liters** per hour – ideal for commercial, industrial, or institutional use.
- **Removes:** Bacteria, viruses, sediments, chlorine, bad taste, odors, and organic chemicals.
- **Applications:** Hotels, schools, factories, hospitals, food processing units, and water bottling.



STAINLESS STEEL ULTRA FILTRATION WATER PURIFIER SYSTEM (FLT-5000B)

- **Model:** FLT-5000B
- **Flow Rate:** 5000L/H – suitable for high-usage applications
- **Filtration Precision:** 0.01 micron UF membrane
- **Material:** SS304 stainless steel housing + PVC hollow fiber membrane
- **Housing Lifespan:** Over 50 years
- **Membrane Lifespan:** 3–5 years
- **Flush Type:** Manual
- **Operating Pressure:** 0.1–0.4 MPa
- **Temperature Range:** 5–45°C

WATER PURIFIER SYSTEM
FLT-1000A, FLT-3000B, FLT-4000B, 159\4000L, 159\6000L, 159\8000L

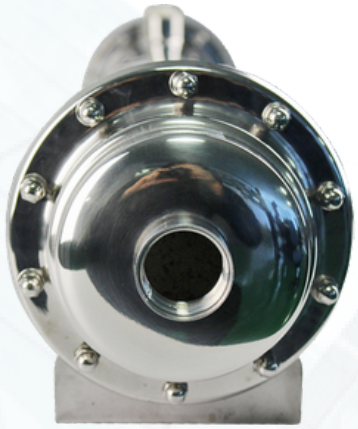

STAINLESS STEEL ULTRA FILTRATION WATER PURIFIER SYSTEM (FLT-4000B)

- **Model:** FLT-4000B
- **Flow Rate:** 4000L/H – suitable for high-usage applications
- **Filtration Precision:** 0.01 micron UF membrane.
- **Material:** SS304 stainless steel housing + PVC hollow fiber membrane
- **Housing Lifespan:** Over 50 years
- **Membrane Lifespan:** 3–5 years
- **Flush Type:** Manual
- **Operating Pressure:** 0.1–0.4 MPa
- **Temperature Range:** 5–45°C
- **Installation:** Under-sink or wall-mounted
- **Dimensions:** Housing – 162×1130mm | UF membrane – 108×1050mm



STAINLESS STEEL ULTRA FILTRATION WATER PURIFIER SYSTEM (FLT-3000B)

- **Model:** FLT-3000B
- **Flow Rate:** 3000L/H – suitable for high-usage applications
- **Filtration Precision:** 0.01 micron UF membrane
- **Material:** SS304 stainless steel housing + PVC hollow fiber membrane
- **Housing Lifespan:** Over 50 years
- **Membrane Lifespan:** 3–5 years
- **Flush Type:** Manual
- **Operating Pressure:** 0.1–0.4 MPa
- **Temperature Range:** 5–45°C
- **Installation:** Under-sink or wall-mounted
- **Dimensions:** Housing – 150×1010mm | UF membrane – 108×900mm.



STAINLESS STEEL ULTRA FILTRATION WATER PURIFIER SYSTEM (FLT-1000A)

- **Model:** FLT-1000A
- **Flow Rate:** 1000L/H
- **Filtration Precision:** 0.01 micron UF membrane
- **Material:** SS304 stainless steel housing + PVC membrane
- **Housing Lifespan:** Over 50 years
- **Membrane Lifespan:** 3–5 years
- **Flush Type:** Manual
- **Working Pressure:** 0.1–0.4 MPa
- **Temperature Range:** 5–45°C
- **Installation:** Under-sink or wall-mounted
- **Dimensions:** Housing – 147×500mm | UF membrane – 90×420mm.



STAINLESS STEEL ULTRA FILTRATION PVDF WATER PURIFIER SYSTEM – VERTICAL (159-4000L)

- Stainless steel housing for maximum hygiene and corrosion resistance.
- PVDF membrane filtration – high flow rate with low fouling.
- Capacity range: Up to 4000L flow rate per hour.
- Removes bacteria, viruses, colloids, and turbidity.
- Retains beneficial minerals and maintains water taste.
- Vertical space-saving design with easy access for maintenance.



STAINLESS STEEL ULTRA FILTRATION PVDF WATER PURIFIER SYSTEM – VERTICAL (159-6000L)

- Stainless steel housing for maximum hygiene and corrosion resistance.
- PVDF membrane filtration – high flow rate with low fouling.
- Capacity range: Up to 6000L flow rate per hour.
- Removes bacteria, viruses, colloids, and turbidity.
- Retains beneficial minerals and maintains water taste.
- Vertical space-saving design with easy access for maintenance.



STAINLESS STEEL ULTRA FILTRATION PVDF WATER PURIFIER SYSTEM – VERTICAL (159-8000L)

- Stainless steel housing for maximum hygiene and corrosion resistance.
- PVDF membrane filtration – high flow rate with low fouling.
- Capacity range: Up to 8000L flow rate per hour.
- Removes bacteria, viruses, colloids, and turbidity.
- Retains beneficial minerals and maintains water taste.
- Vertical space-saving design with easy access for maintenance.

OUR VALUED PARTNERS

DANUBE

IMESA

CLM

JENSEN

FIRBIMATIC

PONY

ROTONDI group A step ahead

STIRMATIC

40 Years BVM

BVM

FOLTEX USA

BIEFFE FARINELLI

الريس لمعدات ومستلزمات المغاسل

AL RAYES LAUNDRY

EQUIPMENT & ACCESSORIES

info@arle-qa.com

Tel: +974 44510993

P.O.Box 3312 Doha - Qatar

www.arle-qa.com